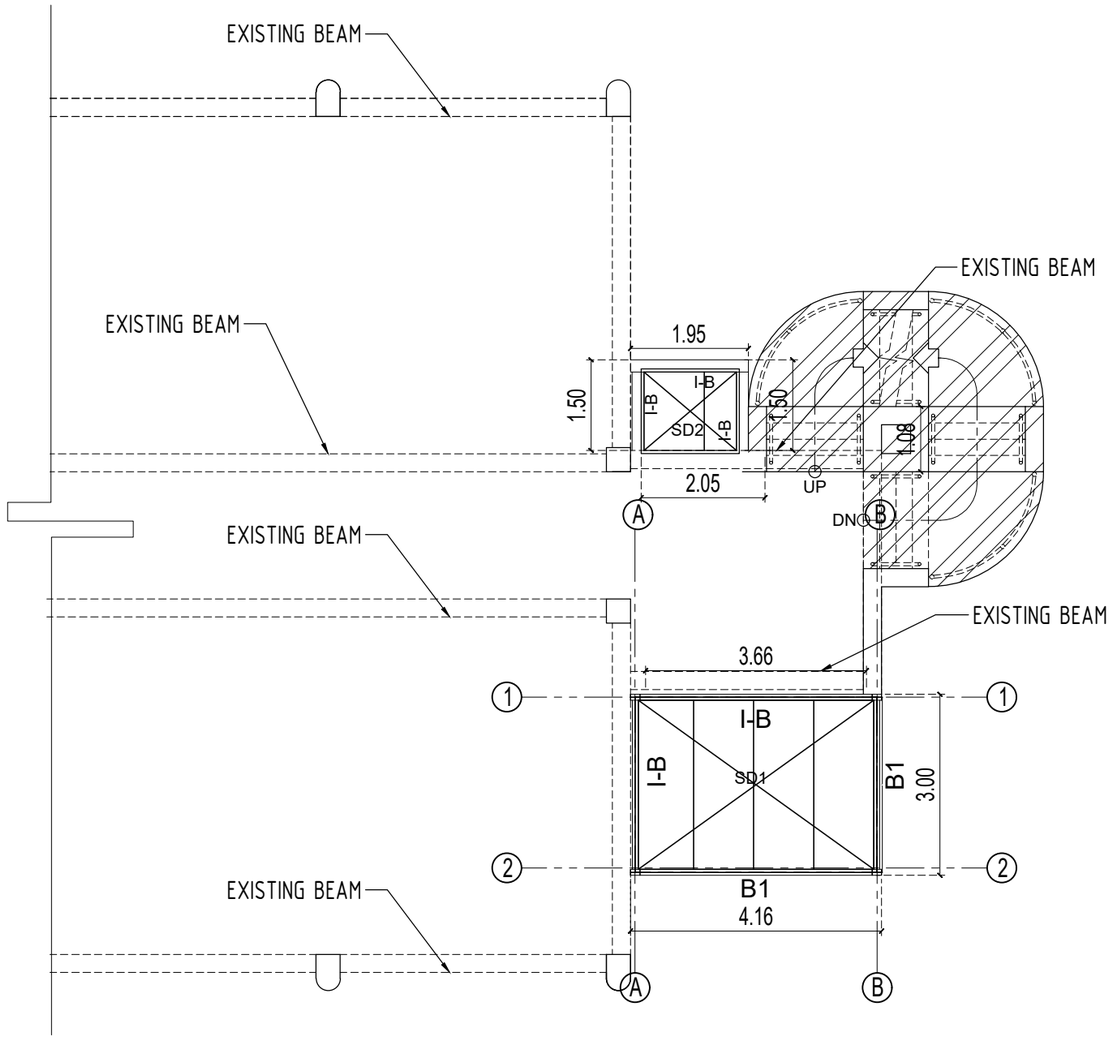

FLOOR FRAMING PLAN

Scale: 1:100M

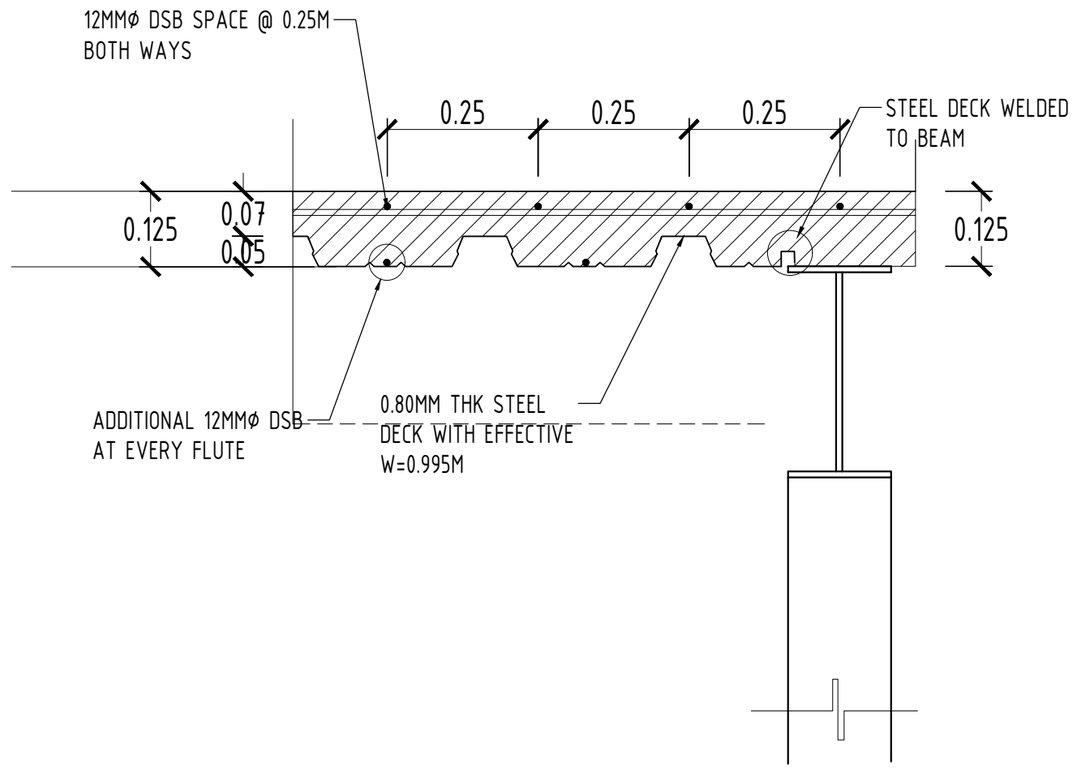

BLOW-UP DET. OF SLAB, STEEL DECK AND BEAM CONNECTION

Scale: 1:100M

PHILIPPINE PORTS AUTHORITY

PROJECT TITLE:

PROVISION OF ADMIN LOBBY

PORT OF DAPITAN, DAPITAN, ZAMBOANGA DEL NORTE

SHEET NO. **ST**

PREPARED BY:	CHECKED BY:	REVIEWED BY:	RECOMMENDING APPROVAL BY:	APPROVED BY:
ALLELUIA W. MOHAMMAD ENGINEERING ASSISTANT A	**ENGR. BRYAN E. BALLON** SENIOR ENGINEER - A	**ENGR. DIOSDADO U. ARANAYDO** PRINCIPAL ENGINEER - A	**ENGR. ABDURASAD S. HASAN** ESD-MANAGER	**ENGR. SUBANRIO I. LIM** PORT MANAGER