BAGONG PILIPINAS

PHILIPPINE PORTS AUTHORITY

REQUEST FOR QUOTATION

1. The Philippine Ports Authority (PPA), Port Management Office (PMO) Mindoro, through its Bids and Awards Committee (BAC), invites contractors duly registered with the Philippine Contractors Accreditation Board (PCAB) to submit their quotation or bid proposal for the maintenance project described herein. This procurement will be conducted in accordance with Rule IV, Section 34 of Republic Act No. 12009 (NGPA) and its Implementing Rules and Regulations (IRR), which governs Small Value Procurement:

   a. Project Title : Maintenance of Mooring Bollard and Curtain Wall
   b. Location : Port of Lubang, Occidental Mindoro
   c. Project ID No. : MPF-MDO-27-2026
   d. Scope of Works :

Item #	Description	Quantity	Unit
1.00	Mobilization, Demobilization and Cleaning Up	1.00	Ls
2.00	Mooring Bollard		
2.01	Chip-Off, Disposal and Preparation for Repair	1.00	Ls
2.02	Supply and Place 3500psi Concrete	2.00	Cu M
2.03	Supply and Place Reinforcing Steel Bars for Concreting Works	172.80	Kgs
2.04	Supply and Install Mooring Bollard	2.00	Sets
3.00	Curtain Wall		
3.01	Repainting of Curtain Wall	197.00	Sq. M

   e. Approved Budget for the Contract (ABC) : Php 900,796.42
   f. Contract Duration : Sixty (60) Calendar Days

2. Prospective bidders shall submit their best offer for the item/s described herein, subject to the Terms and Conditions provided, including the following required documents, **duly signed** by the bidder or its authorized representative:

   1. Request for Quotation (RFQ);
   2. Specifications;
   3. PERT/CPM;
   4. Copy of PCAB License;
   5. Omnibus Sworn Statement;
   6. Copy of PhilGEPS Certificate of Registration; and
   7. List of Equipment, if required:
      a. Electric Grider
      b. Dump Truck
      c. . Welding Machine
      d. Concrete Mixer (1-Bagger)
      e. Concrete Vibrator (3-5hp)
      f. Bar Cutter
      g. Bar Bender
      h. Boom Truck
      i. Jackhammer with Compressor, 350cfm

3. Quotation/bid proposal must be submitted to the **Bids and Awards Committee (BAC), c/o BAC Secretariat, PPA PMO-Mindoro, Port Area, Barangay San Antonio, Calapan City, Oriental Mindoro**, on or before **2:00 p.m., 20 October 2026.**

4. Terms and Conditions:

   4.1 The Price Quotation (Annex "A") shall be in the BAC-prescribed form and shall be submitted, either in an open or sealed envelope, together with the Bill of Quantities (Annex "B") and all corresponding detailed estimates, at the address stated above, not later than the time and date specified hereof.

   4.2 Price Quotations should be typewritten or legibly handwritten in indelible ink, with the values and prices of the items quoted totaled accordingly. Any interlineation, erasure or overwriting shall be valid only if they are signed or initialed by signatory or his/her duly authorized representative.

   4.3 The bidder shall include in his/her Price Quotation all related expenses and obligations, including Value Added Tax (VAT), as well as the carrying out of services and supply of necessary labor and materials in undertaking the works in accordance with relevant conditions, rules, regulations, drawing and specifications prescribed by Philippine Ports Authority, Port Management Office – Mindoro.

   4.4 All Price Quotations shall carry a validity period of at least Thirty (30) calendar days after receipt of the Notice to Proceed (NTP).

   4.5 Liquidated damages equivalent to one tenth of one percent (0.1%) of the cost of the unperformed portion of the works per day of delay. The PPA, PMO-Mindoro shall rescind the contract once the cumulative amount of liquidated damages reaches ten percent (10%) of the amount of the contract, without prejudice to other courses of action and remedies open to it.

   4.6 Warranty of the works shall be for a period of One (1) year from the date of acceptance by the PPA, PMO – Mindoro.

5. The Philippine Ports Authority, PMO-Mindoro reserves the right to reject any and all bids, declare a failure of bidding, without offering any reason, waive any defect therein and make an award to the bidder whose quotation is the most advantageous to the Authority. PPA likewise assumes no obligation for whatever losses that may be incurred by the bidder in preparation of quotations nor does it guarantee that the award shall be made.

LEO A. ROMERO
BAC Chairperson

08 October 2026

Annex “A”

Price Quotation Form

Date : _____

The Chairperson
Bids and Awards Committee (BAC)
Philippine Ports Authority
Port Management Office – Mindoro
Port Area, San Antonio
Calapan City, Oriental Mindoro

Dear Sir:

After having carefully read and accepted the terms and conditions in the Request for Quotation (RFQ) for the procurement of the project, entitled **Maintenance of Mooring Bollard and Curtain Wall, Port of Lubang, Occidental Mindoro,** under Project ID No. **MPF-MDO-27-2026**, we hereby submit our quotation corresponding to your requirements.

The Total Price of our Quotation is _____
_____ (Php _____).

The above-quoted prices are inclusive of all costs and applicable taxes.

We/I shall complete the works in accordance with the Drawing and Bid Documents within _____ (_____) Calendar Days, beginning at the most, five (5) days from the date of receipt of the Notice to Proceed.

We/I understand that the Authority may order additions to or deletions from the scope of work as specified, if necessary.

Enclosed herewith also are the Detailed Estimates and Computations of the cost of all items of works.

Very truly yours,

Name and Signature : _____

Position : _____

Company : _____

PhilGEPS Reg. No. : _____

Contact Number : _____

Email Address : _____

ANNEX "B'

Philippine Ports Authority
PORT MANAGEMENT OFFICE - MINDORO
Port Area, San Antonio, Calapan City
Oriental Mindoro

BILL OF QUANTITIES

INSTRUCTIONS

1. Accomplish the RFQ including this supporting documents correctly.
2. Do not alter the contents of all forms in any way.
3. Failure to comply with any of the mandatory requirements will disqualify your quotation.

After having carefully read and accepted the Terms and Conditions, I/we submit our quotation/s for the project below:

Name of Project : **Maintenance of Mooring Bollard and Curtain Wall**
Location : **Port of Lubang, Occidental Mindoro**

Item No.	Description	Quantity	Unit	Unit Price (Pesos)	Amount (Pesos)
1.00	Mobilization, Demobilization and Cleaning Up	1.00	L.S.	_____	_____
2.00	*Mooring Bollard*				
2.01	Chip-Off, Disposal and Preparation for repair	1.00	L.S.	_____	_____
2.02	Supply and Place 3500 psi Concrete	2.00	CU.M.	_____	_____
2.03	Supply and Place Reinforcing Steel Bars for Concreting Works	172.80	KGS.	_____	_____
2.04	Supply and Install Mooring Bollard	2.00	SET	_____	_____
3.00	*Curtain Wall*				
3.01	Repainting of Curtain Wall including surface preparation	197.00	SQ.M.	_____	_____

Total Bid Price _____

_____ Php _____

Philippine Ports Authority
PORT MANAGEMENT OFFICE – MINDORO
Engineering Services Division
San Antonio, Port Area, Calapan City
Oriental Mindoro

MAINTENANCE OF MOORING BOLLARD AND CURTAIN WALL
PORT OF LUBANG, OCCIDENTAL MINDORO

Technical Specifications

I. GENERAL CONDITION

The Work generally consist of furnishing of all labor, materials and equipment required to carry out and complete the ***Maintenance of Mooring Bollard and Curtain Wall, Port of Lubang, Occidental Mindoro,*** in accordance with the contract drawings and in conformity with these specifications.

PLANS AND SPECIFICATIONS

All drawings, whether in small scale or detailed, are intended to correspond with specifications to form part thereof and the contract documents. Where figures are given, they are to be followed in preference to measurement by scale. Anything shown on the drawings but not indicated in the specifications or vice-versa or anything not expressly set forth in either but which is reasonably implied, shall be furnish and installed as though specifically shown and mentioned in both, without extra cost to PPA.

II. SCOPE OF WORKS

1.00 General Expenses

1.01 Mobilization, Demobilization and Cleaning Up

The Contractor shall mobilize and put into work all personnel, plant, and equipment required to undertake the works. The minimum equipment required to be mobilized at site are the following:

Equipment Description	*Quantity*
Electric Grinder	One (1) Unit
Dump Truck	One (1) Unit
Jackhammer w/ compressor, 350cfm	One (1) Unit
Concrete Mixer (1-bagger)	One (1) Unit
Concrete Vibrator (3.5 hp)	One (1) Unit
Bar Cutter	One (1) Unit
Bar Bender	One (1) Unit
Boom Truck	One (1) Unit
Welding Machine	One (1) Unit

PMO MINDORO

SAFETY

During the course of survey and clearing, any obstacles which are recognized and seemed to be explosive or hazardous to workers shall be removed from the site by the proper Authority.

At the end of each day's work, the Contractor shall keep the workplace in safe condition and clean so that no part is in danger of falling or crating hazard to personnel or equipment.

2.00 Mooring Bollard

2.01 Chip-Off, Disposal and Preparation for repair

The work includes the furnishing of all labor, materials and equipment required to carry out the demolition, removal and disposal of old structures, port accessories and obstructions including demolition of miscellaneous, etc. as required for the execution of the Contract.

The Contractor shall submit the proposed methodology or procedure of demolition work with detailed drawings and calculations if necessary, to the Engineer for approval, before the execution of the Works.

The Contractor shall keep all pavements and landing areas to and from the site of the disposal area clean and free of mud, dirt and debris during and after the execution of disposal. Disposal of debris and materials shall be as directed by the Engineer.

INTERFERENCE WITH PORT OPERATIONS

During the execution of the work, the Contractor shall not interfere with the shipping, navigation and other traffic in the port.

The Contractor shall make arrangements with the operations people on the schedule of demolition and related works to keep port operation activities undisturbed at all times.

Prior to commencement of the demolition works, the Contractor shall inform/announce to port users the schedule of disconnection of utilities.

STORAGE AND DUMPING

Prior to the commencement of the demolition work, the Engineer shall submit to the Contractor a list in which all the materials to be salvaged and overhauled, as property of PPA, and the description of the location of their storage. Materials embedded in concrete units shall not be salvaged.

The Contractor shall separate materials to be salvaged from debris. Salvaged materials shall be loaded, transported and unloaded by the Contractor at the specified locations.

The Contractor may dump debris or extracted concrete on land areas but out of the site, which areas shall be procured and prepared at his own expense. In this case, safety measures shall be undertaken in the transporting, unloading, covering and others as requested by the Engineer.

PMO MINDORO

2.02 Supply and Place 3500 psi Concrete

The work shall include but not limited to the furnishing of all labor, materials, equipment, and incidentals necessary to complete the supply and placing of 3500psi concrete for superstructures.

MATERIAL REQUIREMENTS

Concrete

The work shall include but not limited to the supply and placing of concrete inclusive of transport in accordance with these specifications and where shown on the Drawings.

Specifications of the materials comprising the concrete mixture shall conform to the following:

Cement – the cement to be used shall be ordinary Portland cement, ASTM Type 1 designation C150. Quality test for every 2,000 bags (40kg) or fraction thereof is required.

Fine Aggregate – for concrete and mortar shall be clean and complying with ASTM C33 specifications for concrete aggregates. The sand shall come from approved sources and sand which in the opinion of the PPA Engineer has become contaminated shall be rejected and removed from site. Quality test for grading, elutriation (wash), bulk specific gravity, absorption, mortar strength, soundness, organic impurities, unit weight, % clay lumps and shale for every 1,500 cubic meter or fraction thereof is required.

Coarse Aggregate – shall comply with ASTM C33 specification. It may either be natural gravel or stone crushed to the desired size and shall only be obtained from approved quarries. Quality test for grading, bulk specific gravity, absorption, and abrasion for every 1,500 cubic meter or fraction thereof is required.

Water – clean fresh potable water shall be used for the mixing of all concrete and mortar mixtures. Sea water shall not be used at any time. Certificate from the Engineer or quality test for density and chloride contest per source is required.

EXECUTION

Concrete mixer shall be stationary mixer i.e. one bagger mixer. The mixer must be capable of combining the materials into a uniform mixture and of discharging this mixture without segregation.

Prior to placing of concrete, debris, dirt, and other foreign materials shall be removed from the interior of the forms and from inner surface of mixing equipment. Temperature steel reinforcing bars shall be secured in position and shall be inspected and approved by the PPA Engineer before placing the concrete.

PMO MINDORO

Concrete shall be handled from the one bagger mixer and placed to final deposit in a continuous manner, as rapidly as practicable and without 4 segregation or loss of ingredients until the activity of placing concrete is completed.

Ideally, the temperature of concrete during the period of mixing, transport and placing should not be more than 32º C. Where cold joints tend to form or where surfaces set and dry too rapidly or plastic shrinkage cracks tend to appear, concrete shall be kept moist by fog sprays, or other approved means, applied shortly after placement and before finishing.

Where applicable, immediately after placing, each layer of concrete shall be compacted by internal concrete vibrators supplemented by hand spading, rodding, and tamping, as necessary.

Concrete shall be protected adequately from injurious action by sun, rain, flowing water and mechanical injury and shall not be allowed to dry out from the time it is placed until the expiration of the minimum curing periods specified herein. Curing shall be accomplished by moist curing or by application of liquid membrane forming compound.

As the work progresses, cylinder samples shall be taken and tested in accordance with standards for testing of concrete cylinder samples. One set consisting of three concrete cylinder samples shall be taken from each day's pouring and to represent not more than 75 cu.m. of concrete or fraction thereof. Tests will be made at 7 and 28 days from time of sampling. The average of the strengths of the three cylinders tested shall not be lower than the specified compressive strength of 3,500 psi.

Slump test for every mix of concrete is required.

Quality test for admixture and concrete curing materials per shipment is required.

2.03 Supply and Place Reinforcing Steel Bars for Concreting Works

The work shall consist of the supply and installation of the reinforcing steel bars in accordance with the sizes, number and shape of RSB indicated on the Drawings and in the approved bar cutting schedule.

GENERAL PROVISIONS

Reinforcement shall be free of loose or flaky rust and mill scale, or coating and any other substance that would reduce or destroy the bond with concrete. Wire brushing of the concrete may be required before fixing in order to achieve the required condition. Reinforcement shall not be bent or straightened in a manner injurious to the steel or concrete. The use of heat to bend or straighten reinforcement shall not be permitted. Bars with developed cracks or splits shall be rejected and replaced.

Splices and overlapping in reinforcement where applicable shall conform to current standards and accepted engineering practice. Lap lengths shall not be less than 40 times the reinforcing bar diameter or as shown on the drawings or otherwise directed by the PPA Engineer. All laps shall be staggered or made at points where steel stress has fallen to less than half the allowable stress. Where lap shall not be staggered or be made at points of reduced stress, lap length shall be increased by 30%.

MATERIAL REQUIREMENTS

Steel reinforcement used shall have deformed surfaces and shall conform to ASTM as follows:

16 mm Ø and above – ASTM 305, Min. Yield Strength of 414 MPa

12 mm Ø and below – ASTM A615-74a, Min. Yield Strength of 275 Mpa

2.04 Supply and Install Mooring Bollard

The work shall include furnishing of all labor, materials, equipment and other incidentals necessary to complete the supply and installation of mooring cleat including its complete accessories in accordance with the sizes, distances and design shown on the Drawings and as directed by the PPA Engineer.

Design and manufacturer Requirements

Designated load capacity of mooring cleat shall be as shown on the drawings, and shall be referred to as the safe working load. The mooring bollards shall be capable of withstanding a proof test load of 1.5 times the safe working load.

Mooring bollard shall be of the dimensions, weights, capacities and designs in accordance with shop drawings approved by the Engineer and shall be fabricated by approved manufacturer with cast steel conforming to the requirements indicated in the plan/drawings, or approved equivalent.

The size of the bolts, nuts and washer shall be in accordance with the specification provided in the plan/drawings. The anchor plate shall be connected tothe holding down bolt as shown in the drawings. All bolts,nuts, washers, etc. that are exposed shall be galvanized to the satisfaction of the Engineer.

Samples of the bolts, nuts, washes and anchor plates shall be submitted to the Engineer for approval before being used in the works.

Concrete Foundation

Concrete foundation for mooring bollard shall conform to the requirements "Supply and Place 3500 psi Concrete"

Visual Inspection

All mooring delivered to site shall be inspected by the Engineer for any sign of flaws o defect inimical to usage.

Test Inspection

Inspection of all materials and methods of fabrication shall be carried out by the contractor. However, the Engineer reserves the right to inspect all facilities at any time during the manufacture to ensure that the materials and workmanship are in accordance with Specifications and the best of workmanship.

PMO MINDORO

3.00 Curtain Wall

3.01 Repainting of Curtain Wall including surface preparation

The work includes the furnishing of all labor and equipment required to carry out the surface preparation and painting of curtain wall as indicated on the Drawings and/or as directed by the PPA Engineer.
Materials to be used

1. Acrytex Primer w/ reducer
2. Yellow - Reflectorized Traffic Paint

All painting works shall be done under conditions which shall not jeopardize the appearance or quality of the painting in any way. The Engineer shall have the right to reject all material such as high solid modified epoxy paint and polyurethane finish paint or work that is unsatisfactory and require the replacement of either or both at the expense of the Contractor.

The Contractor shall endeavor to protect the work of others during the time repainting work is in progress. The Contractor shall be responsible for any and all damage to any other work in the course of his painting job. Protective coverings shall be used to protect floors, fixtures and equipment while painting; care shall be exercised to prevent paint being spattered unto surfaces which are not painted.

WORKMANSHIP

All painting work shall be first class and in accordance with the best standard and practices of the trade.

The Contractor shall examine carefully all surfaces to be painted and before beginning any of his work shall make sure that the work of other trades has been installed in a workman like condition ready to receive paint. Metal surfaces shall be clean, dry, and free from mill scale, rust, grease, oil or any other substance which could affect the quality of the painting.

Paint shall be applied at proper consistency and each coat shall be brushed evenly free of brush marks, sags, and runs. Care shall be exercised to avoid lapping of paint on glass or hardware. Paint shall be sharply applied to require lines. Finish paint surfaces shall be free from defects or blemishes. Surfaces from which such paint cannot be removed satisfactorily shall be painted or repainted as required to produce a finish satisfactorily to the Engineer.

Succeeding paint coatings shall be applied only when the previous coat is hard and dry.

All painting materials shall be used in strict accordance with manufacturers' directions, spread or flowed on smoothly with proper film thickness and without runs, sags, skips or other defects.

PMO MINDORO

PREPARATION OF PAINT

Paint containers shall be delivered to the job site in manufacturer's unopened containers and shall be opened only required for use. Paint shall be mixed only in the designated room or space in the presence of the Engineer or his representative. Paint shall be thoroughly stirred or agitated to uniformly smooth consistency suitable for proper application. Unless otherwise specified or approved, no materials shall be reduced, changed, or use except in accordance with manufacturer's label or tag on container. In all cases, paint shall be prepared and handled in a manner to prevent deterioration and inclusion of foreign matter.

PREPARATION OF SURFACES

All surfaces shall be free from dirt, dust, oil grease, efflorescence, loose cement, chalk and other deleterious matter shall be removed and surface roughened when necessary to insure good paint adhesion. The method of surface preparation shall be left to the discretion of the Contractor, but results obtained shall be satisfactory to the Engineer.

All holes, cracks and depression shall be neatly filled with patching plaster, mixed and applied to match existing plaster. Patches shall be sanded flush and smooth and properly sealed before applying prime coat.

III. MEASUREMENT FOR PAYMENT

In accordance with Section II Scope of Works of this Technical Specifications, the pertinent items of work described therein and to be executed by the contractor shall be measured and paid for according to the following terms:

- All scope of works, activities shall be paid in accordance with the unit price for said item of works done/completed indicated in the Bill of Quantities (BOQ), plan and certified by the PPA Engineer.

IV. AS-BUILT DRAWINGS AND PHOTOGRAPHS

1.00 Photographs taken before, during and after completion of the project shall be submitted as part of the documentary requirements for the progress billing.

2.00 At the completion of the Project, the Contractor shall prepare four (4) sets of "As-built" Drawings which shall be submitted to the PPA, PMO-Mindoro as part of the documentary requirements for the formers final billing. The as-built drawings shall indicate therein all the original items of work, changes, deviations and additional work items (if any), undertaken by the contractor to complete the project. The as-built drawings shall bear the title block prescribed by the PPA and shall be signed by the contractor's authorized representative prior to submission to PPA, PMO-Mindoro.

PMO MINDORO

REPUBLIC OF THE PHILIPPINES)
CITY/MUNICIPALITY OF _____) S.S.

OMNIBUS SWORN STATEMENT

I, *[Name of Affiant]*, of legal age, *[Civil Status]*, *[Nationality]*, and with residence at [*Address of Affiant]*, after having been duly sworn in accordance with law, do hereby depose and state that:

1. *Select one, delete the others:*

   - *If sole proprietorship:* I am the sole proprietor or authorized representative of *[Name of Bidder]* with office address at *[Address of Bidder]*;

   - *If partnership, corporation, cooperative, or joint venture:* I am the duly authorized and designated representative of ***[****Name of Bidder]* with office address at *[Address of Bidder]*;

   - *If individual consultant not registered under a sole proprietorship, in case of Consulting Services:* I am the individual consultant or authorized representative of *[Name of Bidder]* with office address at *[Address of Bidder]*;

2. *Select one, delete the others:*

   - *If sole proprietorship:* As the owner and sole proprietor or authorized representative of *[Name of Bidder]*, I have full power and authority to do, execute and perform any and all acts necessary to participate, submit the bid, and to sign and execute the ensuing contract for *[Project Title]* of the *[Name of the Procuring Entity][insert* "as supported by the attached duly notarized Special Power of Attorney" *for authorized representative]*;

   - *If partnership, corporation, cooperative, or joint venture:* I am granted full power and authority to do, execute and perform any and all acts necessary to participate, submit the bid, and to sign and execute the ensuing contract for *[Project Title]* of the *[Name of the Procuring Entity]*, as supported by the attached duly notarized Special Power of Attorney, Board/Partnership Resolution, or Secretary's Certificate, whichever is applicable*;*

   - *If individual consultant not registered under a sole proprietorship, in case of Consulting Services:* As the individual consultant or authorized representative of *[Name of Bidder]*, I have full power and authority to do, execute and perform any and all acts necessary to participate, submit the bid, and to sign and execute the ensuing contract for *[Project Title]* of the *[Name of the Procuring Entity]*, as supported by the attached duly notarized Special Power of Attorney *for authorized representative*;

3. *[Name of Bidder]* is not "blacklisted" or barred from bidding by the Government of the Philippines or any of its agencies, offices, corporations, or Local Government Units, foreign government/foreign or international financing institution whose blacklisting rules have been recognized by the Government Procurement Policy Board; by itself or by relation, membership, association, affiliation, or controlling interest with another blacklisted person or entity;

4. Each of the documents submitted in satisfaction of the bidding requirements is an authentic copy of the original, complete, and all statements and information provided therein are true and correct;

5. *[Name of Bidder]* is authorizing the Head of the Procuring Entity or its duly authorized representative(s) to verify all the documents submitted;

6. *Select one, delete the others:*

   - *If sole proprietorship :* The *[Name of Bidder]* and its spouse are not related by consanguinity or affinity up to the third civil degree to the Head of the Procuring Entity, Procurement Agent (if engaged), or the End-User or Implementing Unit, project

consultants, head of the Project Management Office, or the members of the Bids and Awards Committee (BAC), the Technical Working Group, and the BAC Secretariat;

- *If partnership :* The partnership itself and the partners of ***[****Name of Bidder]* are not related by consanguinity or affinity up to the third civil degree to the Head of the Procuring Entity, Procurement Agent (if engaged), or the End-User or Implementing Unit, project consultants, head of the Project Management Office, or the members of the Bids and Awards Committee (BAC), the Technical Working Group, and the BAC Secretariat;

- *If cooperative:* The cooperative itself and members of the board of directors, general manager, or chief executive officer of *[Name of Bidder]* are not related by consanguinity or affinity up to the third civil degree to the Head of the Procuring Entity, Procurement Agent (if engaged), or the End-User or Implementing Unit, project consultants, head of the Project Management Office, or the members of the Bids and Awards Committee (BAC), the Technical Working Group, and the BAC Secretariat;

- *If corporation, or joint venture:* The corporation or joint venture itself, and officers, directors, controlling stockholders and beneficial owners of *[Name of Bidder]* are not related by consanguinity or affinity up to the third civil degree to the Head of the Procuring Entity, Procurement Agent (if engaged), End-User or Implementing Unit, project consultants, head of the Project Management Office, or the members of the Bids and Awards Committee (BAC), the Technical Working Group, and the BAC Secretariat;

- *If individual consultant not registered under a sole proprietorship, in case of Consulting Services:* The individual consultant and its spouse are not related by consanguinity or affinity up to the third civil degree to the Head of the Procuring Entity, Procurement Agent (if engaged), End-User or Implementing Unit, project consultants, head of the Project Management Office, or the members of the Bids and Awards Committee (BAC), the Technical Working Group, and the BAC Secretariat;

7. It is understood that failure to faithfully disclose its relationship with the Head of the Procuring Entity, members of the BAC, the TWG, and the BAC Secretariat, the head of the PMO or the end-user unit or implementing unit, and the project consultants of the Procuring Entity, or of the procurement agent by consanguinity or affinity up to the third civil degree, as well as its submission of beneficial ownership information containing false entries shall be subject to blacklisting under Section 100 of the Implementing Rules and Regulations (IRR) of Republic Act (RA) No. 12009, without prejudice to criminal and civil liabilities under applicable laws, including their accessory penalties, if any.

   Select one, delete the rest:

- *In case of corporations: [Name of Bidder]* declares its beneficial ownership information consistent with its updated General Information Sheet or Beneficial Ownership Declaration Form or any other document duly submitted to the SEC and has maintained a valid and updated file therein in compliance with Sections 20.2.9.1, 81, and 82 of the IRR of RA No. 12009.

- *In case of Foreign Bidders: [Name of Bidder]* submitted an appropriate equivalent document in English issued by the country of the bidder concerned in accordance with Section 20.2.9.2 of the IRR of RA No. 12009.

8. *[Name of Bidder]* complies with existing labor laws and standards; and

9. *[Name of Bidder]* is aware of and has undertaken the following responsibilities as a Bidder:

   a) Carefully examine all of the Bidding Documents;

   b) Acknowledge all conditions, local or otherwise, affecting the implementation of the Contract;

   c) Made an estimate of the facilities available and needed for the contract to be bid, if any; and

d) Inquire or secure Supplemental Bid Bulletin(s) issued for the *[Project Title]*.

10. *[Name of Bidder]* did not give or pay directly or indirectly, any commission, amount, fee, or any form of consideration, pecuniary or otherwise, to any person or official, personnel or representative of the government in relation to any procurement project or activity.

11. In case advance payment was made or given to *[Name of Bidder]*, failure to perform or deliver any of the obligations and undertakings in the contract shall be sufficient grounds to constitute criminal liability under existing laws.

IN WITNESS WHEREOF, I have hereunto set my hand this __ day of ___, 20__ at _____, Philippines.

Duly authorized to sign the Bid for and behalf of:

[Insert Bidder's Name]

[Affiant's Signature over Printed Name]
[Position/Designation]
[Date]

JURAT

SUBSCRIBED AND SWORN to before me this _____ day of *[month] [year]* at *[place of execution]*, Philippines. Affiant/s is/are personally known to me and was/were identified by me through competent evidence of identity as defined in the 2004 Rules on Notarial Practice (A.M. No. 02-8-13-SC). Affiant/s exhibited to me his/her *[insert type of government identification card used]*, with his/her photograph and signature appearing thereon, with no. _____.

WITNESS MY HAND AND SEAL this ___ day of *[month] [year].*

NAME OF NOTARY PUBLIC
Notarial Commission No. _____
Notary Public for _____ until _____
Roll of Attorneys No. _____
PTR No. __, *[date issued], [place issued]*
IBP No. __, *[date issued], [place issued]*

Doc. No. _____
Page No. _____
Book No. _____
Series of _____.

PHILIPPINE PORTS AUTHORITY

PMO- MINDORO

MAINTENANCE OF MOORING BOLLARD AND CURTAIN WALL

PORT OF LUBANG, OCCIDENTAL MINDORO

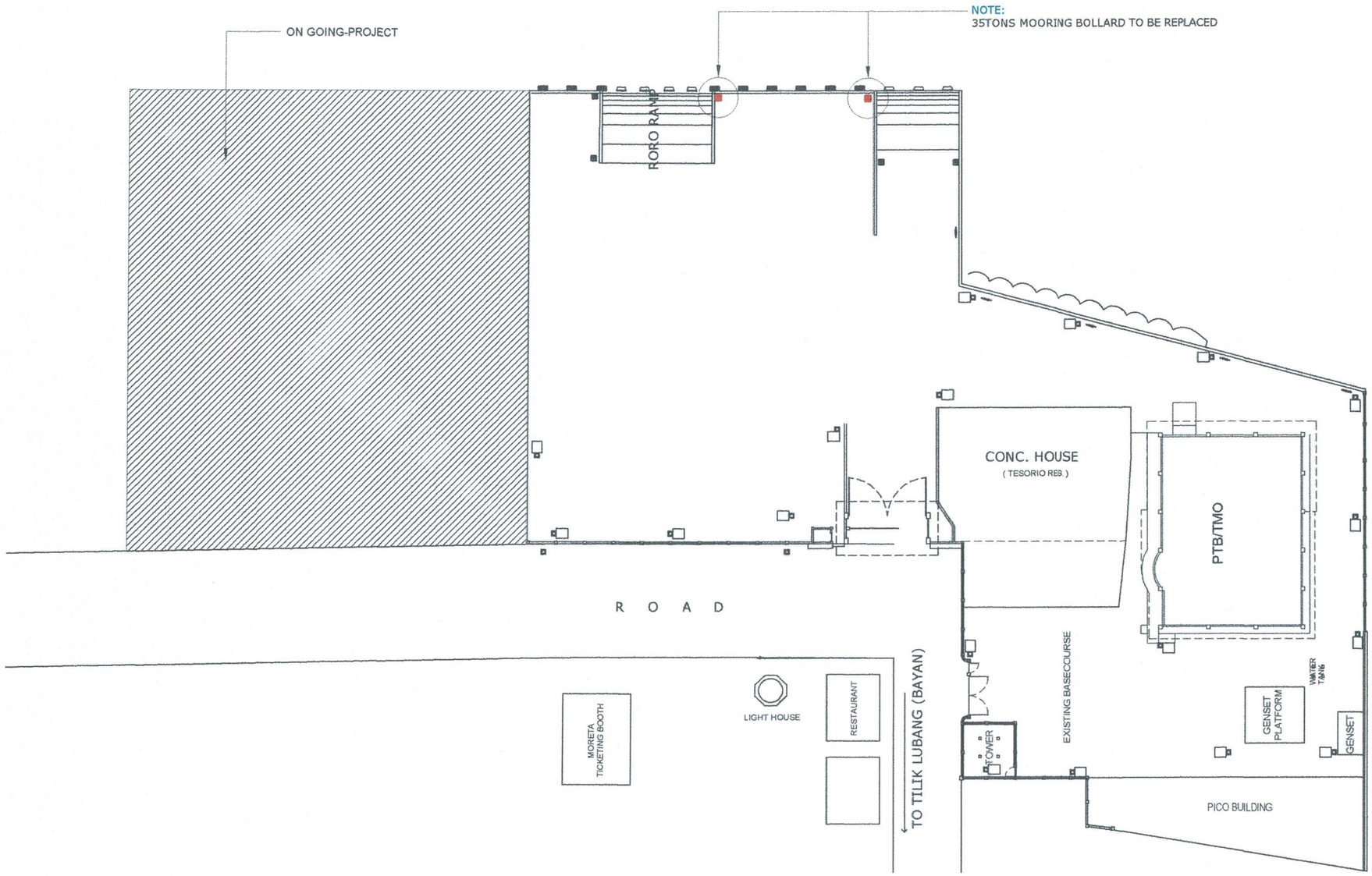

LOCATION PLAN OF MOORING BOLLARD

SCALE 1:500M.

PHILIPPINE PORTS AUTHORITY PMO- MINDORO	PROJECT TITLE: MAINTENANCE OF MOORING BOLLARD AND CURTAIN WALL PORT OF LUBANG, OCCIDENTAL MINDORO				SHEET CONTENTS:	SCALE: AS SHOWN
	PREPARED BY: ROMELL C. MALUBAY Engineering Assistant A	SUBMITTED BY: ALVIN JAY A. SERGIO Engineer III	CHECKED / REVIEWED BY: RONALD O. MATIBAG Principal Engineer A	RECOMMENDING APPROVAL BY: MARGARITO P. DIMAILIG Division Manager A, ESD	APPROVED BY: JON GABRIELL M. MANANSALA Port Manager A	AS SHOWN	SHEET NO. 1 of 4 DATE : 12 JANUARY, 2026

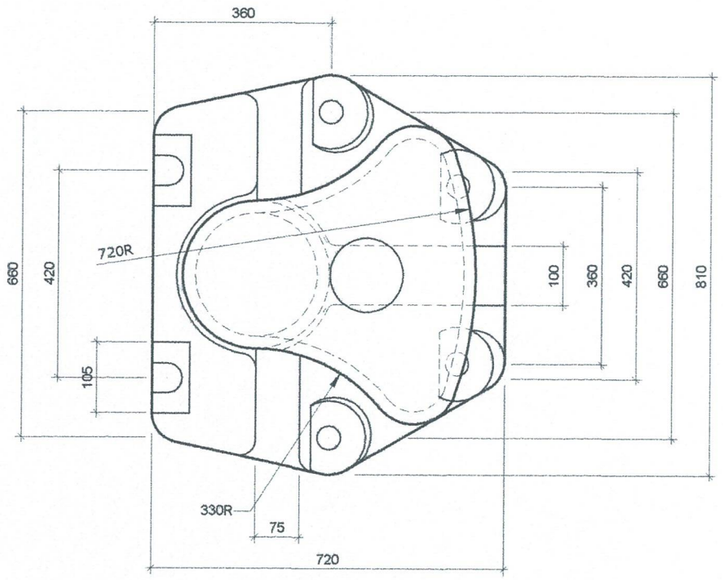

PLAN

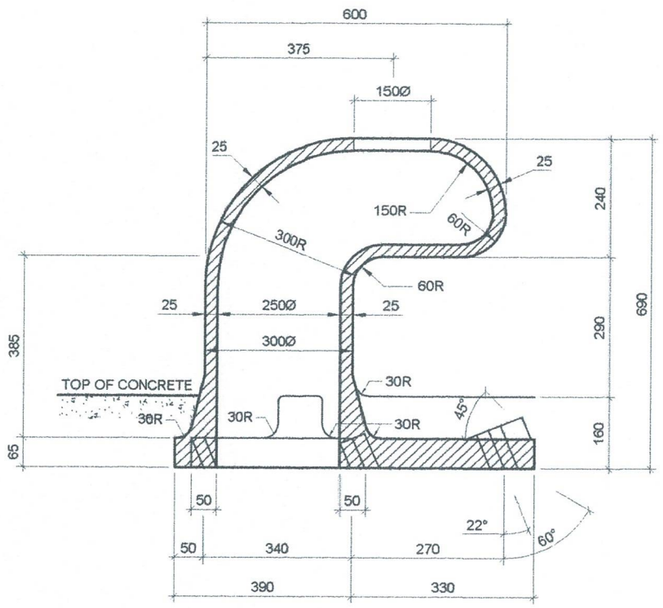

SECTION

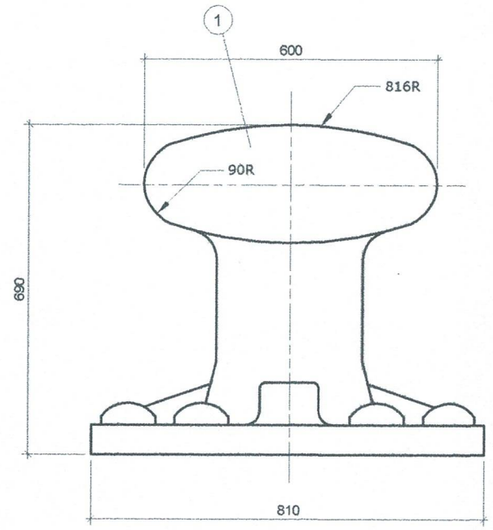

ELEVATION

DETAIL OF 35 TONS MOORING TEE HEAD

SCALE NTS.

NOTE:
REPAINTING WORKS ON MOORING BOLLARD
1. USE RUST CONVERTER
2. USE PRIMER ACRYTEX PAINT
3. TOP COAT REFLECTORIZE PAINT

REPAINTING WORKS ON CONCRETE
(BLACK & YELLOW STRIPE)
1. USE PRIMER ACRYTEX PAINT
2. TOP COAT REFLECTORIZE PAINT

MATERIALS AND WEIGHT

NO.	DESCRIPTION	MATERIALS AND SPECIFICATION	ALLOWABLE STRESS (kgf/cm²)	QTY.	ALLOWABLE STRESS (kgf/cm²)	WT. (kgf)
1	BODY	JIS G 5101 3 GRADE SC 46	1,400	1	440	440
2	ANCHOR BOLT	JIS G 3101 2 GRADE SS 41 JIS B 0205 M 33 - 3.5	1,400	6	9	54
3	HEXAGON NUTS	JIS B 1181 1 GRADE 4T. M 33 - 3.5	-	12	-	-
4	PLAIN WASHER	JIS B 1256 ROUND STEEL	-	6	-	-
5	ANCHOR RING	JIS G 3101 2 GRADE SS 41 OR JIS G 5101 3 GRADE SS 46	1,400	6	8	48

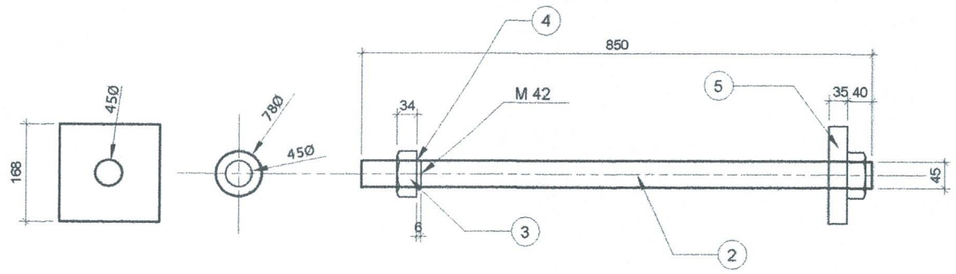

PHILIPPINE PORTS AUTHORITY PMO- MINDORO	PROJECT TITLE: MAINTENANCE OF MOORING BOLLARD AND CURTAIN WALL PORT OF LUBANG, OCCIDENTAL MINDORO				SHEET CONTENTS:	SCALE: AS SHOWN
	PREPARED BY: ROMELL C. MALUBAY Engineering Assistant A	SUBMITTED BY: ALVIN JAY A. SERGIO Engineer III	CHECKED / REVIEWED BY: RONALD O. MATIBAG Principal Engineer A	RECOMMENDING APPROVAL BY: MARGARITO P. DIMAILIG Division Manager A, ESD	APPROVED BY: JON GABRIELL M. MANANSALA Port Manager A	AS SHOWN	SHEET NO. 2 of 4 DATE : 12 JANUARY, 2026

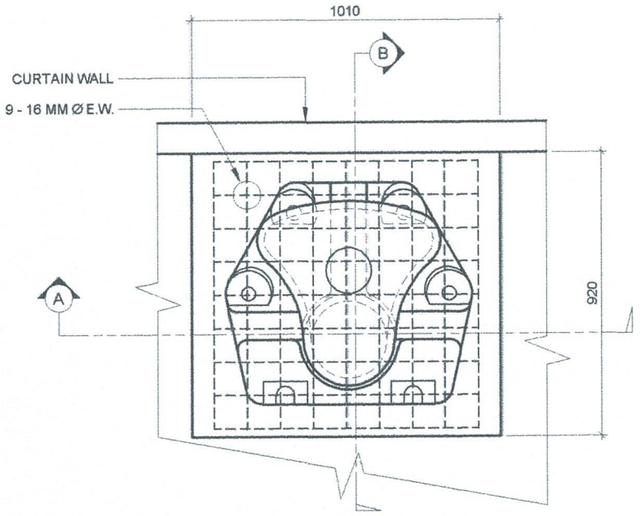

PLAN

NOTE:
REPAINTING WORKS ON MOORING BOLLARD
1. USE RUST CONVERTER
2. USE PRIMER ACRYTEX PAINT
3. TOP COAT REFLECTORIZE PAINT

REPAINTING WORKS ON CONCRETE
(BLACK & YELLOW STRIPE)
1. USE PRIMER ACRYTEX PAINT
2. TOP COAT REFLECTORIZE PAINT

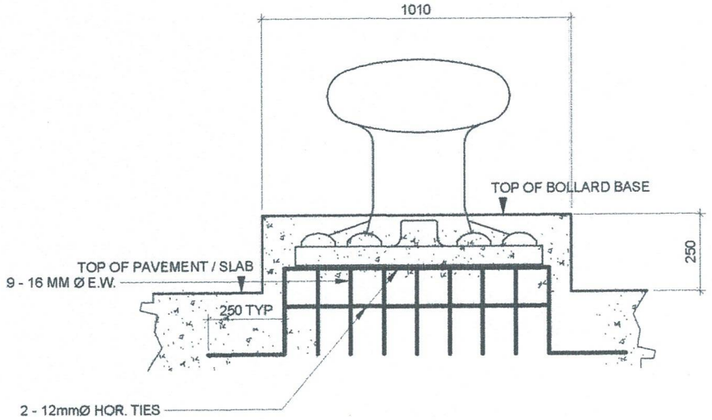

SECTION "A"

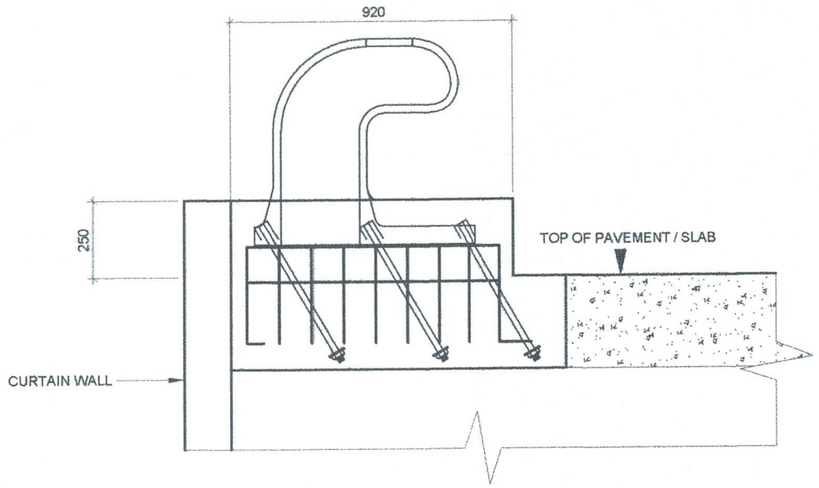

SECTION "B"

BOLLARD BASE DETAIL

SCALE 1:20 M.

PHILIPPINE PORTS AUTHORITY PMO- MINDORO	PROJECT TITLE: MAINTENANCE OF MOORING BOLLARD AND CURTAIN WALL PORT OF LUBANG, OCCIDENTAL MINDORO				SHEET CONTENTS:	SCALE: AS SHOWN
	PREPARED BY: RONELL C. MALUBAY Engineering Assistant A	SUBMITTED BY: ALVIN JAY A. SERGIO Engineer III	CHECKED / REVIEWED BY: RONALD O. MATIBAG Principal Engineer A	RECOMMENDING APPROVAL BY: MARGARITO P. DIMAILIG Division Manager A, ESD	APPROVED BY: JON GABRIELL M. MANANSALA Port Manager A	AS SHOWN	SHEET NO. 3 of 4 DATE : 12 JANUARY, 2026

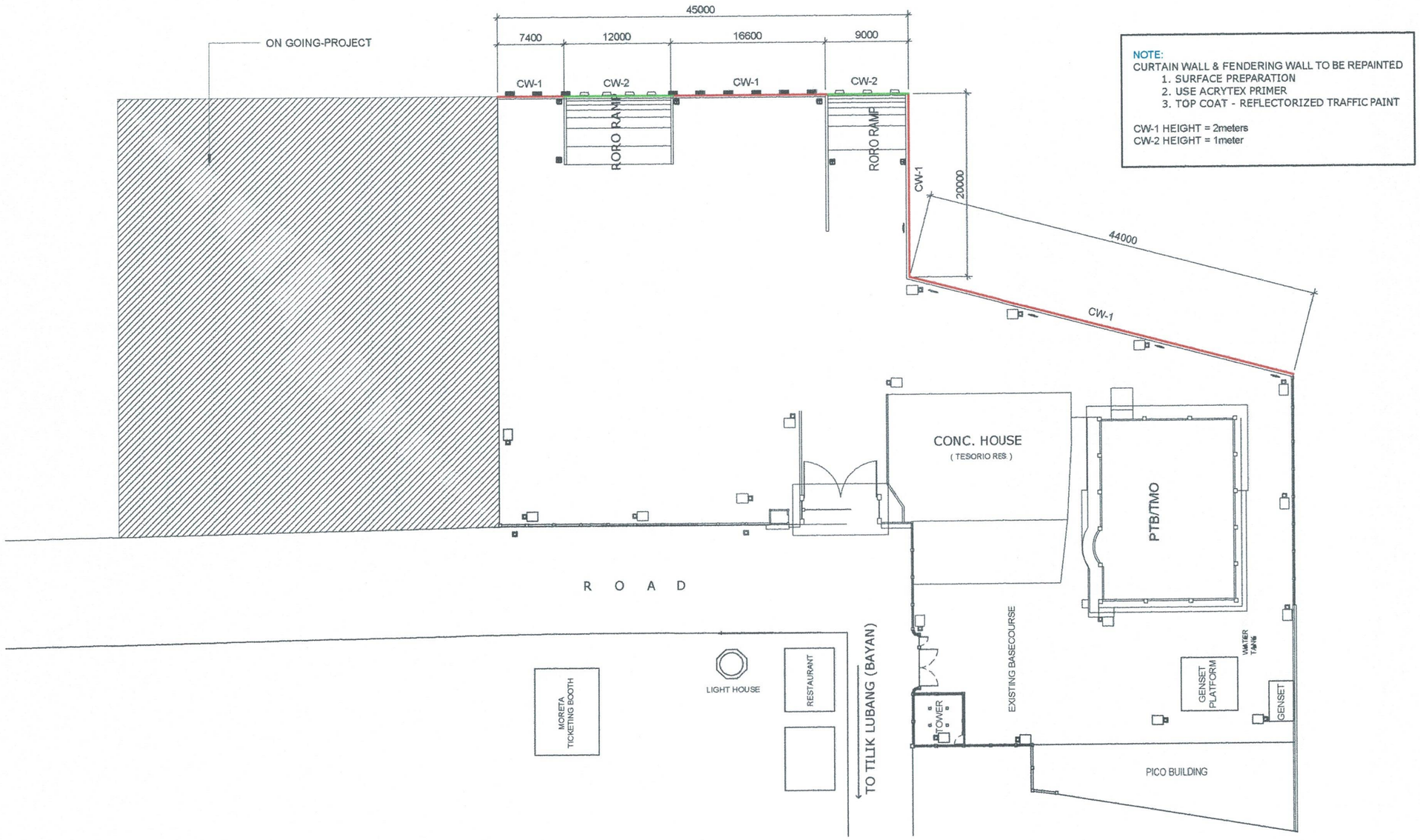

NOTE:
CURTAIN WALL & FENDERING WALL TO BE REPAINTED
1. SURFACE PREPARATION
2. USE ACRYTEX PRIMER
3. TOP COAT - REFLECTORIZED TRAFFIC PAINT

CW-1 HEIGHT = 2meters
CW-2 HEIGHT = 1meter

LOCATION OF CURTAIN WALL

SCALE 1:500 M.

PHILIPPINE PORTS AUTHORITY PMO- MINDORO	PROJECT TITLE: MAINTENANCE OF MOORING BOLLARD AND CURTAIN WALL PORT OF LUBANG, OCCIDENTAL MINDORO				SHEET CONTENTS:	SCALE: AS SHOWN
	PREPARED BY: ROMELL C. MALUBAY Engineering Assistant A	SUBMITTED BY: ALVIN JAY A. SERGIO Engineer III	CHECKED / REVIEWED BY: RONALD O. MATIBAG Principal Engineer A	RECOMMENDING APPROVAL BY: MARGARITO P. DIMAILIG Division Manager A, ESD	APPROVED BY: JON GABRIELL M. MANANSALA Port Manager A	AS SHOWN	SHEET NO. 4 of 4 DATE : 12 JANUARY, 2026