Philippine Ports Authority
Port Management Office-Zamboanga Del Norte

EMERGENCY REPAIR OF RC DECK, PILE CAP, RIPRAP, GUARDHOUSE AND REPAIR/ REPLACEMENT OF DAMAGED V-TYPE RDF AND USED TRUCK TIRES
Port of Lamao, Liloy, Zamboanga Del Norte

TABLE OF CONTENTS

SECTION I. INVITATION TO BID **4**

SECTION II. INSTRUCTIONS TO BIDDERS **7**

1. Scope of Bid 8
2. Funding Information 8
3. Bidding Requirements 8
4. Corrupt, Fraudulent, Collusive, Coercive, and Obstructive Practices 8
5. Eligible Bidders 8
6. Origin of Associated Goods 9
7. Subcontracts 9
8. Pre-Bid Conference 9
9. Clarification and Amendment of Bidding Documents 9
10. Documents Comprising the Bid: Eligibility and Technical Components 10
11. Documents Comprising the Bid: Financial Component 10
12. Alternative Bids 10
13. Bid Prices 11
14. Bid and Payment Currencies 11
15. Bid Security 11
16. Sealing and Marking of Bids 11
17. Deadline for Submission of Bids 12
18. Opening and Preliminary Examination of Bids 12
19. Detailed Evaluation and Comparison of Bids 12
20. Post Qualification 12
21. Signing of the Contract 12

SECTION III. BID DATA SHEET **14**

SECTION IV. GENERAL CONDITIONS OF CONTRACT **20**

1. Scope of Contract 21
2. Sectional Completion of Works 21
3. Possession of Site 21
4. The Contractor's Obligations 21
5. Performance Security 22
6. Site Investigation Reports 22
7. Warranty 22

8. Liability of the Contractor....22
9. Termination for Other Causes....22
10. Dayworks....23
11. Program of Work....23
12. Instructions, Inspections and Audits....23
13. Advance Payment....23
14. Progress Payments....23
15. Operating and Maintenance Manuals....23

SECTION V. SPECIAL CONDITIONS OF CONTRACT....25

SECTION VI. SPECIFICATIONS....27

SECTION VII. DRAWINGS....65

SECTION VIII. BILL OF QUANTITIES....88

SECTION IX. CHECKLIST OF TECHNICAL AND FINANCIAL DOCUMENTS....104

SECTION X. BIDDING FORMS....107

BID FORM....108

Section I. Invitation to Bid

Invitation to Bid

EMERGENCY REPAIR OF RC DECK, PILE CAP, RIPRAP, GUARDHOUSE AND REPAIR/ REPLACEMENT OF DAMAGED V-TYPE RDF AND USED TRUCK TIRES
PORT OF LAMAO, LILOY, ZAMBOANGA DEL NORTE

1. The Philippine Ports Authority, PMO-Zamboanga Del Norte, through the *PPA Corporate Funds CY 2021* intends to apply the sum of *Php 27,544,787.00* being the Approved Budget for the Contract (ABC) to payments under the contract for ***Emergency Repair of RC Deck, Pile Cap, Riprap, Guardhouse and Repair/Replacement of Damaged V-Type RDF and Used Truck Tires, Port of Lamao, Liloy, Zamboanga Del Norte***. Bids received in excess of the ABC shall be automatically rejected at bid opening.

2. The Philippine Ports Authority, PMO-Zamboanga Del Norte, now invites bids for the above Procurement Project. Completion of the Works is required ***384 Calendar Days***. Bidders should have completed a contract similar to the Project. The description of an eligible bidder is contained in the Bidding Documents, particularly, in Section II (Instructions to Bidders).

3. Bidding will be conducted through open competitive bidding procedures using non-discretionary "*pass/fail*" criterion as specified in the 2016 revised Implementing Rules and Regulations (IRR) of Republic Act (RA) No. 9184.

4. Interested bidders may obtain further information from *Philippine Ports Authority, PMO-Zamboanga Del Norte* and inspect the Bidding Documents at the address given below from ***8am to 5pm, Monday to Friday.***

5. A complete set of Bidding Documents may be acquired by interested bidders on ***September 24, 2021 to October 18, 2021*** from the given address and website and upon payment of the applicable fee for the Bidding Documents, pursuant to the latest Guidelines issued by the GPPBB, in the amount of ***Twenty-Five Thousand Pesos (Php 25,0000.00) inclusive of VAT***. The Procuring Entity shall allow the bidder to present its proof of payment in person or through electronic means.

6. The Philippine Ports Authority, PMO-Zamboanga Del Norte will hold a Pre-Bid Conference on ***October 4, 2021, 2:00 PM*** at the 3rd *Floor Conference Room, GAD Hall, Port of Dapitan, Dapitan City* which shall be open to prospective bidders.

7. Bids must be duly received by the BAC Secretariat through manual submission at the office address as indicated below on or before ***October 18, 2021, 1:00 PM***. Late bids shall not be accepted.

8. All bids must be accompanied by a bid security in any of the acceptable forms and in the amount stated in **ITB** Clause 16.

9. Bid opening shall be on ***October 18, 2021, 1:30 PM*** at the given address below. Bids will be opened in the presence of the bidders' representatives who choose to attend the activity.

10. The *Philippine Ports Authority, PMO-Zamboanga Del Norte reserves* the right to reject any and all bids, declare a failure of bidding, or not award the contract at any time prior to contract award in accordance with Sections 35.6 and 41 of the 2016 revised Implementing Rules and Regulations (IRR) of RA No. 9184, without thereby incurring any liability to the affected bidder or bidders.

    - Required PCAB Registration: **Small B- Ports, Harbor, and Offshore Engineering**

11. For further information, please refer to:

    PPCI MELINDA H. CERBITO
    BAC-Secretariat Head
    PPA,PMO-Zamboanga Del Norte
    Email address: ppa.pmo.dapitan@gmail.com

12. You may visit the following websites:

    For downloading of Bidding Documents: *www.ppa.com.ph*

BYRON P. PATAG
Chairperson, BAC-PMO-ZDN

Section II. Instructions to Bidders

1. Scope of Bid

The Procuring Entity, *Philippine Ports Authority, PMO-Zamboanga Del Norte* invites Bids for the ***Emergency Repair of RC Deck, Pile Cap, Riprap, Guardhouse and Repair/Replacement of Damaged V-Type RDF and Used Truck Tires,Port of Lamao, Liloy, Zamboanga Del Norte***.

The Procurement Project (referred to herein as "Project") is for the construction of Works, as described in Section VI (Specifications).

2. Funding Information

2.1. The GOP through the source of funding as indicated below for *2021* in the amount of *Php 27,544,787.00*

2.2. The source of funding is:

PPA Corporate Operating Budget.

3. Bidding Requirements

The Bidding for the Project shall be governed by all the provisions of RA No. 9184 and its 2016 revised IRR, including its Generic Procurement Manual and associated policies, rules and regulations as the primary source thereof, while the herein clauses shall serve as the secondary source thereof.

Any amendments made to the IRR and other GPPB issuances shall be applicable only to the ongoing posting, advertisement, or invitation to bid by the BAC through the issuance of a supplemental or bid bulletin.

The Bidder, by the act of submitting its Bid, shall be deemed to have inspected the site, determined the general characteristics of the contracted Works and the conditions for this Project, such as the location and the nature of the work; (b) climatic conditions; (c) transportation facilities; (c) nature and condition of the terrain, geological conditions at the site communication facilities, requirements, location and availability of construction aggregates and other materials, labor, water, electric power and access roads; and (d) other factors that may affect the cost, duration and execution or implementation of the contract, project, or work and examine all instructions, forms, terms, and project requirements in the Bidding Documents.

4. Corrupt, Fraudulent, Collusive, Coercive, and Obstructive Practices

The Procuring Entity, as well as the Bidders and Contractors, shall observe the highest standard of ethics during the procurement and execution of the contract. They or through an agent shall not engage in corrupt, fraudulent, collusive, coercive, and obstructive practices defined under Annex "I" of the 2016 revised IRR of RA No. 9184 or other integrity violations in competing for the Project.

5. Eligible Bidders

5.1. Only Bids of Bidders found to be legally, technically, and financially capable will be evaluated.

5.2. The Bidder must have an experience of having completed a Single Largest Completed Contract (SLCC) that is similar to this Project, equivalent to at least fifty percent (50%) of the ABC adjusted, if necessary, by the Bidder to current prices using the PSA's CPI, except under conditions provided for in Section 23.4.2.4 of the 2016 revised IRR of RA No. 9184.

A contract is considered to be "similar" to the contract to be bid if it has the major categories of work stated in the **BDS**.

5.3. For Foreign-funded Procurement, the Procuring Entity and the foreign government/foreign or international financing institution may agree on another track record requirement, as specified in the Bidding Document prepared for this purpose.

5.4. The Bidders shall comply with the eligibility criteria under Section 23.4.2 of the 2016 IRR of RA No. 9184.

6. Origin of Associated Goods

There is no restriction on the origin of Goods other than those prohibited by a decision of the UN Security Council taken under Chapter VII of the Charter of the UN.

7. Subcontracts

7.1. The Bidder may subcontract portions of the Project to the extent allowed by the Procuring Entity as stated herein, but in no case more than fifty percent (50%) of the Project.

The Procuring Entity has prescribed that:

a. Subcontracting is not allowed.

8. Pre-Bid Conference

The Procuring Entity will hold a pre-bid conference for this Project on the specified date and time and either at its physical address as indicated in paragraph 6 of the **IB.**

9. Clarification and Amendment of Bidding Documents

Prospective bidders may request for clarification on and/or interpretation of any part of the Bidding Documents. Such requests must be in writing and received by the Procuring Entity, either at its given address or through electronic mail indicated in the **IB**, at least ten (10) calendar days before the deadline set for the submission and receipt of Bids.

10. Documents Comprising the Bid: Eligibility and Technical Components

10.1. The first envelope shall contain the eligibility and technical documents of the Bid as specified in **Section IX. Checklist of Technical and Financial Documents**.

10.2. If the eligibility requirements or statements, the bids, and all other documents for submission to the BAC are in foreign language other than English, it must be accompanied by a translation in English, which shall be authenticated by the appropriate Philippine foreign service establishment, post, or the equivalent office having jurisdiction over the foreign bidder's affairs in the Philippines. For Contracting Parties to the Apostille Convention, only the translated documents shall be authenticated through an apostille pursuant to GPPB Resolution No. 13-2019 dated 23 May 2019. The English translation shall govern, for purposes of interpretation of the bid.

10.3. A valid PCAB License is required, and in case of joint ventures, a valid special PCAB License, and registration for the type and cost of the contract for this Project. Any additional type of Contractor license or permit shall be indicated in the **BDS**.

10.4. A List of Contractor's key personnel (e.g., Project Manager, Project Engineers, Materials Engineers, and Foremen) assigned to the contract to be bid, with their complete qualification and experience data shall be provided. These key personnel must meet the required minimum years of experience set in the **BDS**.

10.5. A List of Contractor's major equipment units, which are owned, leased, and/or under purchase agreements, supported by proof of ownership, certification of availability of equipment from the equipment lessor/vendor for the duration of the project, as the case may be, must meet the minimum requirements for the contract set in the **BDS**.

11. Documents Comprising the Bid: Financial Component

11.1. The second bid envelope shall contain the financial documents for the Bid as specified in **Section IX. Checklist of Technical and Financial Documents**.

11.2. Any bid exceeding the ABC indicated in paragraph 1 of the **IB** shall not be accepted.

11.3. For Foreign-funded procurement, a ceiling may be applied to bid prices provided the conditions are met under Section 31.2 of the 2016 revised IRR of RA No. 9184.

12. Alternative Bids

Bidders shall submit offers that comply with the requirements of the Bidding Documents, including the basic technical design as indicated in the drawings and specifications. Unless there is a value engineering clause in the **BDS**, alternative Bids shall not be accepted.

13. Bid Prices

All bid prices for the given scope of work in the Project as awarded shall be considered as fixed prices, and therefore not subject to price escalation during contract implementation, except under extraordinary circumstances as determined by the NEDA and approved by the GPPB pursuant to the revised Guidelines for Contract Price Escalation guidelines.

14. Bid and Payment Currencies

14.1. Bid prices may be quoted in the local currency or tradeable currency accepted by the BSP at the discretion of the Bidder. However, for purposes of bid evaluation, Bids denominated in foreign currencies shall be converted to Philippine currency based on the exchange rate as published in the BSP reference rate bulletin on the day of the bid opening.

14.2. *Payment of the contract price shall be made in:*

a. Philippine Peso.

15. Bid Security

15.1. The Bidder shall submit a Bid Securing Declaration or any form of Bid Security in the amount indicated in the **BDS**, which shall be not less than the percentage of the ABC in accordance with the schedule in the **BDS**.

15.2. The Bid and bid security shall be valid until *[indicate date]*. Any bid not accompanied by an acceptable bid security shall be rejected by the Procuring Entity as non-responsive.

16. Sealing and Marking of Bids

Each Bidder shall submit one copy of the first and second components of its Bid.

The Procuring Entity may request additional hard copies and/or electronic copies of the Bid. However, failure of the Bidders to comply with the said request shall not be a ground for disqualification.

If the Procuring Entity allows the submission of bids through online submission to the given website or any other electronic means, the Bidder shall submit an electronic copy of its Bid, which must be digitally signed. An electronic copy that cannot be opened or is corrupted shall be considered non-responsive and, thus, automatically disqualified.

17. Deadline for Submission of Bids

The Bidders shall submit on the specified date and time and either at its physical address or through online submission as indicated in paragraph 7 of the **IB.**

18. Opening and Preliminary Examination of Bids

18.1. The BAC shall open the Bids in public at the time, on the date, and at the place specified in paragraph 9 of the **IB**. The Bidders' representatives who are present shall sign a register evidencing their attendance. In case videoconferencing, webcasting or other similar technologies will be used, attendance of participants shall likewise be recorded by the BAC Secretariat.

In case the Bids cannot be opened as scheduled due to justifiable reasons, the rescheduling requirements under Section 29 of the 2016 revised IRR of RA No. 9184 shall prevail.

18.2. The preliminary examination of Bids shall be governed by Section 30 of the 2016 revised IRR of RA No. 9184.

19. Detailed Evaluation and Comparison of Bids

19.1. The Procuring Entity's BAC shall immediately conduct a detailed evaluation of all Bids rated "*passed*" using non-discretionary pass/fail criteria. The BAC shall consider the conditions in the evaluation of Bids under Section 32.2 of 2016 revised IRR of RA No. 9184.

19.2. If the Project allows partial bids, all Bids and combinations of Bids as indicated in the **BDS** shall be received by the same deadline and opened and evaluated simultaneously so as to determine the Bid or combination of Bids offering the lowest calculated cost to the Procuring Entity. Bid Security as required by **ITB** Clause 15 shall be submitted for each contract (lot) separately.

19.3. In all cases, the NFCC computation pursuant to Section 23.4.2.6 of the 2016 revised IRR of RA No. 9184 must be sufficient for the total of the ABCs for all the lots participated in by the prospective Bidder.

20. Post Qualification

Within a non-extendible period of five (5) calendar days from receipt by the Bidder of the notice from the BAC that it submitted the Lowest Calculated Bid, the Bidder shall submit its latest income and business tax returns filed and paid through the BIR Electronic Filing and Payment System (eFPS), and other appropriate licenses and permits required by law and stated in the **BDS**.

21. Signing of the Contract

The documents required in Section 37.2 of the 2016 revised IRR of RA No. 9184 shall form part of the Contract. Additional Contract documents are indicated in the **BDS**.

Section III. Bid Data Sheet

Bid Data Sheet

ITB Clause	
5.2	For this purpose, contracts similar to the Project refer to contracts which have the same major categories of work, which shall be: **1.00 Mobilization & Demobilization 1.00 lot** **2.00 REPAIR OF RC DECK** 2.10 Falsework for Demolition of RC Deck 320.50 sq.m 2.20 Demolition Works for the Damaged RC Deck and Curb 304.00 cu.m 2.30 Rebar Works for RC Deck 37,068.00 kg 2.40 Re-installation of 4 Units 35T Mooring Bollard 4.00 units 2.50 Supply and Place Concrete (4000-4500 PSI) 324.00 cu.m **3.00 REPAIR/REPLACEMENT OF DAMAGED V-TYPE RDF AND USED TRUCK TIRES** 3.10 Supply, Deliver and Install Steel Hanging Platform 4.00 units 3.20 Removal of Damaged V-Type RDF and Used Truck Tire Fenders 43.00 units 3.30 Concrete Boring, Placement of RDF & Truck Tire Bolts and Restoration of Damaged Concrete 168.00 holes 3.40 Supply and Delivery of V-Type RDF 5.00 units 3.50 Supply and Delivery of Truck Tire Fenders 23.00 units 3.60 Installation of V-Type RDF and Truck Tire Fenders 43.00 units **4.00 REPAIR OF BULKHEAD AND RIPRAP** 4.10 Supply, Deliver and Placement of Rocks with Grout 1,683.00 cu.m

	4.20 Supply and install reinforcing steel bars for concrete toppings 12,952.00 kg 4.30 Supply and Place Concrete Toppings (4000-4500 PSI) 235. 00 cu.m 4.40 Backfilling and Compaction 714.00 cu.m 4.50 Demolition of CHB Fence, Affected Pavement & Disposal of Surplus 14.00 cu.m 4.60 Excavation Works for CHB Fence 20.00 cu.m 4.70 Rebar Works for the Reconstruction of CHB Fence 443.00 kg 4.80 Concreting Works for the CHB Fence 5.00 cu.m 4.90 Masonry Works for the CHB Fence 26.00 sq.m 4.91 Supply, Delivery & Installation of Barbed Wires 1.00 roll 4.92 Painting Works for the CHB Fence 58.00 sq.m **5.00 REPAIR OF GATE AND PORT SIGNAGE** 5.10 Stainless Steel Works for the Gate 14.90 sq.m 5.20 Repair of Signage with Lightings 10.62 sq.m **6.00 REPAIR OF GUARD HOUSE** 6.10 Demolition of Guard House 16.25 sq.m 6.20 Excavation Works 10.80 cu.m 6.30 Rebar Works 2,167.00 kg 6.40 Concreting Works 16.00 cu.m

	6.50 Backfilling Works 40.00 cu.m 6.60 Waterproofing Works 41.00 sq.m 6.70 Installation of PVC Downspout 48.00 ln.m 6.80 Masonry Works 70.00 sq.m 6.90 Steel Works 223.97 kg 6.91 Painting Works 140.00 sq.m 6.92 Electrical Works 1.00 lot 6.93 Glass Works 7.80 sq.m 6.94 Carpentry Works 1.00 set **7.00 Construction Safety and Health Program 1.00 lot**
	Sub-contracting is not allowed.
10.3	*Required PCAB License: Small B, Ports, Harbor, and Offshore Engineering, provided that the contractor has an experience similar to the project to be bid for at least 50% of the ABC.*
10.4	The key personnel must meet the required minimum years of experience set below:

Key Personnel	General Experience	Relevant Experience
Project Manager		*3 Years*
Project Engineer		*3 Years*
Safety Officer		*1 Year*
Materials Engineer		*1 Year*
Construction Foreman		*3 Years*

10.5	The minimum major equipment requirements are the following: Equipment Capacity Number of Units Banca 1-unit Owned/Leased Air Equipment Compressor, 356-450Cfm 1-unit,Owned/Leased Rebar Bender, up to 25mm, 3-Phase 1-unit Owned/Leased Rebar Cutter, up to 25mm, Single Phase 1-unit Owned/Leased Oxy-Acetylene Cutter w/Complete Acc. 1-unit Owned/Leased Welding Machine w/Complete Acc. 1-unit Owned/Leased Pneumatic Breaker w/ 50 ft hose, oiler, & attach 1-unit Owned/Leased Dumptruck (6-8.99 cu.yd), 220HP 1-unit Owned/Leased Backhoe, Crawler Mounted, 0.8 1-unit Owned/Leased Forklift, 5000 lbs capacity 1-unit,Owned/Leased Transit Mixer, 5-6 cu.m capacity, 175 HP 1-unit Owned/Leased Concrete Vibrator, 2" 1-unit Owned/Leased Water Truck 500-1000 gals. Capacity, 360 HP 1-unit Owned/Leased Concrete Coring Machine DD120 1-unit Owned/Leased Dispenser MD 200, for HT-RD-500 1-unit Owned/Leased Pay Loader (1.68 cu.m capacity) wheel type, 100HP 1-unit Owned/Leased 1-bagger concrete mixer (4-6 cu.ft/min) 1-unit Owned/Leased Road Grader(165 HP capacity) 1-unit Owned/Leased Road Roller (10.5T capacity vibrating), 118 HP 1-unit Owned/Leased Electric Drill 1-unit Owned/Leased Sander/ Concrete Grinder 1-unit Owned/Leased Air Compressor with Spray Gun 1-unit Owned/Leased Concrete Saw, 16"-18", 3/4 Cutting Depth 1-unit Owned/Leased Plate Compactor, 500-600m, 6-8 HP (Gas) 1-unit Owned/Leased
12	Alternative bids shall not be accepted.
15.1	The bid security shall be in the form of a Bid Securing Declaration or any of the following forms and amounts:

	a. The amount of not less than Php 550,895.74 *[Insert two percent (2%) of ABC]*, if bid security is in cash, cashier's/manager's check, bank draft/guarantee or irrevocable letter of credit; b. The amount of not less than Php 1,377,239.35 *[Insert five percent (5%) of ABC]* if bid security is in Surety Bond.
16	One(1) original and four (4) machine copies
19.2	Partial bids are not allowed.
20	Latest income and business tax returns filed and paid through the BIR Electronic Filing and Payment System (eFPS).
21	Additional contract documents relevant to the Project that may be required by existing laws and/or the Procuring Entity, such as construction schedule and S-curve, manpower schedule, construction methods, equipment utilization schedule, construction safety and health program approved by the DOLE, and other acceptable tools of project scheduling.

Section IV. General Conditions of Contract

1. Scope of Contract

This Contract shall include all such items, although not specifically mentioned, that can be reasonably inferred as being required for its completion as if such items were expressly mentioned herein. All the provisions of RA No. 9184 and its 2016 revised IRR, including the Generic Procurement Manual, and associated issuances, constitute the primary source for the terms and conditions of the Contract, and thus, applicable in contract implementation. Herein clauses shall serve as the secondary source for the terms and conditions of the Contract.

This is without prejudice to Sections 74.1 and 74.2 of the 2016 revised IRR of RA No. 9184 allowing the GPPB to amend the IRR, which shall be applied to all procurement activities, the advertisement, posting, or invitation of which were issued after the effectivity of the said amendment.

2. Sectional Completion of Works

If sectional completion is specified in the **Special Conditions of Contract (SCC)**, references in the Conditions of Contract to the Works, the Completion Date, and the Intended Completion Date shall apply to any Section of the Works (other than references to the Completion Date and Intended Completion Date for the whole of the Works).

3. Possession of Site

3.1 The Procuring Entity shall give possession of all or parts of the Site to the Contractor based on the schedule of delivery indicated in the **SCC,** which corresponds to the execution of the Works. If the Contractor suffers delay or incurs cost from failure on the part of the Procuring Entity to give possession in accordance with the terms of this clause, the Procuring Entity's Representative shall give the Contractor a Contract Time Extension and certify such sum as fair to cover the cost incurred, which sum shall be paid by Procuring Entity.

3.2 If possession of a portion is not given by the above date, the Procuring Entity will be deemed to have delayed the start of the relevant activities. The resulting adjustments in contract time to address such delay may be addressed through contract extension provided under Annex "E" of the 2016 revised IRR of RA No. 9184.

4. The Contractor's Obligations

The Contractor shall employ the key personnel named in the Schedule of Key Personnel indicating their designation, in accordance with **ITB** Clause 10.3 and specified in the **BDS**, to carry out the supervision of the Works.

The Procuring Entity will approve any proposed replacement of key personnel only if their relevant qualifications and abilities are equal to or better than those of the personnel listed in the Schedule.

5. Performance Security

5.1. Within ten (10) calendar days from receipt of the Notice of Award from the Procuring Entity but in no case later than the signing of the contract by both parties, the successful Bidder shall furnish the performance security in any of the forms prescribed in Section 39 of the 2016 revised IRR.

5.2. The Contractor, by entering into the Contract with the Procuring Entity, acknowledges the right of the Procuring Entity to institute action pursuant to RA No. 3688 against any subcontractor be they an individual, firm, partnership, corporation, or association supplying the Contractor with labor, materials and/or equipment for the performance of this Contract.

6. Site Investigation Reports

The Contractor, in preparing the Bid, shall rely on any Site Investigation Reports referred to in the **SCC** supplemented by any information obtained by the Contractor.

7. Warranty

7.1. In case the Contractor fails to undertake the repair works under Section 62.2.2 of the 2016 revised IRR, the Procuring Entity shall forfeit its performance security, subject its property(ies) to attachment or garnishment proceedings, and perpetually disqualify it from participating in any public bidding. All payables of the GOP in his favor shall be offset to recover the costs.

7.2. The warranty against Structural Defects/Failures, except that occasioned-on force majeure, shall cover the period from the date of issuance of the Certificate of Final Acceptance by the Procuring Entity. Specific duration of the warranty is found in the **SCC**.

8. Liability of the Contractor

Subject to additional provisions, if any, set forth in the **SCC**, the Contractor's liability under this Contract shall be as provided by the laws of the Republic of the Philippines.

If the Contractor is a joint venture, all partners to the joint venture shall be jointly and severally liable to the Procuring Entity.

9. Termination for Other Causes

Contract termination shall be initiated in case it is determined *prima facie* by the Procuring Entity that the Contractor has engaged, before, or during the implementation of the contract, in unlawful deeds and behaviors relative to contract acquisition and implementation, such as, but not limited to corrupt, fraudulent, collusive, coercive, and obstructive practices as stated in **ITB** Clause 4.

10. Dayworks

Subject to the guidelines on Variation Order in Annex "E" of the 2016 revised IRR of RA No. 9184, and if applicable as indicated in the **SCC**, the Dayworks rates in the Contractor's Bid shall be used for small additional amounts of work only when the Procuring Entity's Representative has given written instructions in advance for additional work to be paid for in that way.

11. Program of Work

11.1. The Contractor shall submit to the Procuring Entity's Representative for approval the said Program of Work showing the general methods, arrangements, order, and timing for all the activities in the Works. The submissions of the Program of Work are indicated in the **SCC.**

11.2. The Contractor shall submit to the Procuring Entity's Representative for approval an updated Program of Work at intervals no longer than the period stated in the **SCC.** If the Contractor does not submit an updated Program of Work within this period, the Procuring Entity's Representative may withhold the amount stated in the **SCC** from the next payment certificate and continue to withhold this amount until the next payment after the date on which the overdue Program of Work has been submitted.

12. Instructions, Inspections and Audits

The Contractor shall permit the GOP or the Procuring Entity to inspect the Contractor's accounts and records relating to the performance of the Contractor and to have them audited by auditors of the GOP or the Procuring Entity, as may be required.

13. Advance Payment

The Procuring Entity shall, upon a written request of the Contractor which shall be submitted as a Contract document, make an advance payment to the Contractor in an amount not exceeding fifteen percent (15%) of the total contract price, to be made in lump sum, or at the most two installments according to a schedule specified in the **SCC**, subject to the requirements in Annex "E" of the 2016 revised IRR of RA No. 9184.

14. Progress Payments

The Contractor may submit a request for payment for Work accomplished. Such requests for payment shall be verified and certified by the Procuring Entity's Representative/Project Engineer. Except as otherwise stipulated in the **SCC**, materials and equipment delivered on the site but not completely put in place shall not be included for payment.

15. Operating and Maintenance Manuals

15.1. If required, the Contractor will provide “as built” Drawings and/or operating and maintenance manuals as specified in the **SCC.**

15.2. If the Contractor does not provide the Drawings and/or manuals by the dates stated above, or they do not receive the Procuring Entity’s Representative’s approval, the Procuring Entity’s Representative may withhold the amount stated in the **SCC** from payments due to the Contractor.

Section V. Special Conditions of Contract

Special Conditions of Contract

GCC Clause	
2	*[If different dates are specified for completion of the Works by section, i.e. "sectional completion," these dates should be listed here.]*
4.1	*[Specify the schedule of delivery of the possession of the site to the Contractor, whether full or in part.]*
6	The site investigation reports are: *[list here the required site investigation reports.]*
7.2	*[In case of permanent structures, such as buildings of types 4 and 5 as classified under the National Building Code of the Philippines and other structures made of steel, iron, or concrete which comply with relevant structural codes (e.g., DPWH Standard Specifications), such as, but not limited to, steel/concrete bridges, flyovers, aircraft movement areas, ports, dams, tunnels, filtration and treatment plants, sewerage systems, power plants, transmission and communication towers, railway system, and other similar permanent structures:]* Fifteen (15) years. .
10	a. Dayworks are applicable at the rate shown in the Contractor's original Bid.
11.1	The Contractor shall submit the Program of Work to the Procuring Entity's Representative within *[insert number]* days of delivery of the Notice of Award.
11.2	The amount to be withheld for late submission of an updated Program of Work is [*insert amount*].
13	No Advance payment.
14	*[If allowed by the Procuring Entity, state:]* Materials and equipment delivered on the site but not completely put in place shall be included for payment.
15.1	The date by which operating and maintenance manuals are required is *[date]*. The date by which "as built" drawings are required is *[date]*.
15.2	The amount to be withheld for failing to produce "as built" drawings and/or operating and maintenance manuals by the date required is *[amount in local currency]*.

Section VI. Specifications

Minimum Test Requirements of Construction Materials for PPA Infrastructure Projects

Materials	**Required Tests**	**Minimum Incremental Frequency of Tests**
Portland Cement	Quality Test	For every 2,000 bags (40kg) or fraction thereof
Fine Aggregate	Quality Test for: Grading, Elutriation (wash), Bulk Specific Gravity, Absorption, Mortar Strength, Soundness, Organic Impurities, Unit Weight, % Clay Lumps and Shale	For every 1,500 cubic meter or fraction thereof
Coarse Aggregate	Quality Test for: Grading, Bulk Specific gravity, Absorption and Abrasion	For every 1,500 cubic meter or fraction thereof
Water	Certificate from the Engineer or Quality Test for Density and Chloride Content	One per source
Steel Bars	Mill Certificate and Quality Test for Chemical Composition and Mechanical Properties	For every 10,000 kg. or fraction thereof
Concrete	Compressive Strength on cylinder samples	1 set consisting of 3 concrete cylinder samples shall be taken from each day's pouring and to represent not more than 75 cu.m of concrete or fraction thereof
	Slump Test	For every mix
Admixture and Concrete Curing Materials	Quality Test	One per shipment

Rubber Dock Fenders (RDF)	Physical Test	All Units
Rubber Dock Fenders (RDF)	Performance Test for Energy Absorption and Reaction Force	All Units
Selected Fill	Laboratory California Bearing Ratio (CBR)	For every 2,500 cubic meter or fraction thereof
Selected Fill	Quality Test for Grading, Plasticity and Laboratory Compaction Test	For every 1,500 cubic meter or fraction thereof

Required compressive strength of concrete for the structures is 4,000 – 4,500 psi.

The materials use for the gate and signage must be high grade stainless steel, 304.

DEMOLITION AND REMOVAL WORKS

DESCRIPTION

The work includes furnishing of all labor, materials and equipment required to carry out the demolition of RC Deck required for the execution of the Contract.

The Contractor shall submit the proposed methodology or procedure of demolition work with detailed drawings and calculations if necessary, to the Engineer for approval, before the execution of the Works.

The Contractor shall keep all the adjacent structures areas to and from the site of the disposal area clean and free of mud, dirt and debris during and after the execution of disposal. Disposal of debris and materials shall be as directed by the Engineer.

GENERAL PROVISIONS

1. The Contractor shall be deemed to have satisfied himself of the site conditions, and to have included in his unit prices provision for all risks that may arise during or in connection with the work.
2. The demolition shall be carried out by approved methods and equipment such as concrete breakers, gas-cutters, hydraulic jacks, compressed air disintegrators, etc., however, no blasting shall be used unless approved in writing by the Engineer and after obtaining the written permission of the concerned authorities.
3. The Contractor shall provide suitable equipment, skilled labor and appropriate temporary work such as scaffoldings to ensure safety in his demolition works as well as in the adjacent area.
4. Contractor shall demolish all the structural members above the level on which the subsequent and permanent works under this Contract will begin. To this end, the temporary construction works such as excavation shall be conducted by the Contractor.
5. Materials coming from the demolition works, except general earth, shall remain the property of the Procuring Entity, the designated part of which shall be stored by the contractor at places specified by the Engineer/ Accepting authority. Receiving copy of Turn-Over Report shall be provided.

INTERFERENCE WITH PORT OPERATIONS

During the execution of the work, the Contractor shall not interfere with the shipping, navigation and other traffic in the port.

The Contractor shall make arrangements with the operations people on the schedule of demolition and related works to keep port operation activities undisturbed at all times.

Prior to commencement of the demolition works, the Contractor shall inform/announce to port users the schedule of disconnection of utilities.

STORAGE AND DUMPING

Prior to the commencement of the demolition work, the Engineer shall submit to the Contractor a list in which all the materials to be salvaged and overhauled, as property of PPA, and the description of the location of their storage. Materials embedded in concrete units shall not be salvaged.

The Contractor shall separate materials to be salvaged from debris. Salvaged materials shall be loaded, transported and unloaded by the Contractor at the specified locations.

The Contractor may dump debris or extracted rocks on land areas but out of the site, which areas shall be procured and prepared at his own expense. In this case, safety measures shall be undertaken in the transporting, unloading, covering and others as requested by the Engineer.

EXECUTION

1. Prior to the commencement of demolition works, the alignments of the new construction works to existing structure shall be checked.
2. The width and alignment of portion of existing structure to be demolished shall be marked by paint.
3. With this lines as guides, concrete shall be broken and reinforcing bars cut, such that panels or portions of the structure can be lifted out for disposal elsewhere outside of the operational work area.
4. Demolish RC Deck,Pile Cap,Beam and curbs, and the likes as determined in the field for each project and as shown on the drawings or as directed by the Engineer.

5. Materials coming from the demolition works shall be properly disposed by the Contractor.

SAFETY

During the course of survey and clearing, any obstacles which are recognized and seemed to be explosive or hazardous to workers shall be removed from the site by the proper Authority.

At the end of each day's work, the Contractor shall keep the workplace in safe condition and clean so that no part is in danger of falling or creating hazard to personnel or equipment.

SCOPE OF WORK

Work Schedules

1. After examination of all relevant data, coordination needs, work constrains, equipment to be used and other matters, a PERT/CPM diagram showing the detailed schedule/duration and sequences for the execution of excavation work shall be submitted to the Engineer for approval within 15 days before the proposed commencement of the Works.

EQUIPMENT/LAYOUT OF WORK

Plant

1. The Contractor shall keep on the job sufficient equipment/plant to meet the requirement of the project.
2. The equipment/plant shall be in satisfactorily operating conditions and capable of efficiently performing the excavation works with safety as set forth herein and shall be subject to inspection by the Engineer at all times.

Physical Data/Layout of Work

1. The Authority does not guarantee to keep the project demolition area free from obstruction.
2. The Contractor shall conduct the work in such manner not to disrupt the port operational activities at all times.
3. The Contractor shall layout his work from the government established ranges and gauges which shall be pointed out to him prior to commencement of the demolition work but shall be responsible for all measurements in connection therewith.
4. The Contractor shall furnish, at his own expense, survey equipment, range markers, poles, etc., and labor as may be required in laying out any part of demolition work.

When the Contractor elects to work overtime and on Sundays and legal holidays, appropriate authority from those concern must be secured and notice of his intention to do so shall be submitted to the Engineer within the reasonable time in advance thereof.
The Contractor shall take necessary measures to protect the life health of his men in accordance with the existing laws and regulations of the Government. The Contractor shall provide safety devices to Engineer and personnel while on board the equipment/plant in performance of their official duties.

REINFORCED CONCRETE

SCOPE OF WORK

All works falling under this Section shall include reinforced concrete for all kinds and parts of any reinforced concrete structure.

GENERAL PROVISIONS

1. Full cooperation shall be given to the other trades to install embedded items. Suitable templates or instructions will be provided for setting, items shall have been inspected, and tests for concrete or other materials or for mechanical operations shall have been completed and approved.

2. The following publications of the issues listed below, but referred to thereafter by basic designation only, form as an integral part of this Specification to the extent indicated by the reference thereto:

a. American Concrete Institute (ACI) Standards

ACI 117 Standard Specifications for Tolerance for Concrete Construction and Materials

ACI 121R Quality Management System for Concrete Construction

ACI 201.2R Guide to Durable Concrete

ACI 211.1 Standard Practice for Selecting Proportions for Normal, Heavy-weight and Mass Concrete

ACI 214R Recommended Practice for Evaluation of Strength Test Results of Concrete

ACI 301 Specifications for Structural Concrete

ACI 304.2R Placing Concrete by Pumping Methods

ACI 304R Guide for Measuring, Mixing, Transporting, and Placing Concrete

ACI 305R Hot Weather Concreting

ACI 306.1 Standard Specification for Cold Weather Concreting

ACI 308R Guide to Curing Concrete

ACI 309R Guide for Consolidation of Concrete

ACI 311.4R Guide for Concrete Inspection

ACI 318M	Metric Building Code Requirements for Structural Concrete and Commentary
ACI 347	Guide to Formwork for Concrete
ACI SP-15	Field Reference Manual: Standard Specification for Structural Concrete with Selected ACI and ASTM References
ACI SP-2	ACI Manual of Concrete Inspection

b. American Society for Testing and Materials (ASTM) Publications:

ASTM C 150	Standard Specification for Portland Cement
ASTM C 114	Standard Method for Chemical Analysis of Hydraulic Cement
ASTM C 185	Standard Method for Air Content of Hydraulic Cement
ASTM C 115	Standard Test Method for Fineness of Portland Cement by the Turbidimeter
ASTM C 204	Standard Test Method for Fineness of Hydraulic Cement by Air-Permeability Apparatus
ASTM C 151	Standard Test Method for Autoclave Expansion of Portland Cement
ASTM C 109	Standard Test Method for Compressive Strength of Hydraulic Cement Mortars
ASTM C 266	Standard Test Method for Time of Setting of Hydraulic-

Cement Paste Gilmore Needles

ASTM C 191	Standard Test Method for Time of Setting of Hydraulic Cement by Vicat Needle
ASTM C 33	Standard Specification for Concrete Aggregates
ASTM C 136	Standard Test Method for Sieve Analysis of Fine and Coarse Aggregates
ASTM C 117	Standard Test Method for Materials Finer than 75 micron (No. 200) Sieve in Mineral Aggregates by Washing
ASTM C 29	Standard Test Method for Bulk Density (Unit Weight") and Voids in Aggregate
ASTM C 128	Standard Test Method for Density, Relative Density (Specific Gravity), and Absorption of Fine Aggregates
ASTM C 87	Standard Test Method for Effect of Organic Impurities in Fine Aggregate on Strength of Mortar
ASTM C 88	Standard Test Method for Soundness of Aggregates by Use of Sodium Sulfate or Magnesium Sulfate
ASTM C 142	Standard Test Method for Clay Lumps and Friable Particles in Aggregates
ASTM C 97	Standard Test Method for Absorption and Bulk Specific Gravity of Dimension Stone
ASTM C 127	Test Method for Specific Gravity and Absorption of Coarse Aggregate
ASTM C 535	Standard Test Method for Resistance to Degradation of

	Large-Size Aggregate by Abrasion and Impact in the Los Angeles Machine
ASTM C 88	Standard Test Method for Soundness of Aggregates by Use of Sodium Sulfate or Magnesium Sulfate
ASTM C 131	Test Method for Resistance to Degradation of Small-size Coarse Aggregate by Abrasion and Impact in the Los Angeles Machine
ASTM C 94	Standard Specification for Ready-Mixed Concrete
ASTM D 512	Chloride Ion in Water
ASTM D 516	Sulfate Ion in Water
ASTM A 615	Standard Specification for Deformed and Plain Carbon-Steel Bars for Concrete Reinforcement
ASTM A 370	Standard Test Methods and Definitions for Mechanical Testing of Steel Products
ASTM A 510	Standard Specification for General Requirements for Wire Rods and Coarse Round Wire, Carbon Steel
ASTM A 6	Standard Specification for General Requirements for Rolled Structural Steel Bars, Plates, Shapes, and Sheet Piling
ASTM C 31	Standard Practice for Making and Curing Concrete Test Specimens in the Field
ASTM C 39	Standard Test Method for Compressive Strength of Cylindrical Concrete Specimens

ASTM C 172	Standard Practice for Sampling Freshly Mixed Concrete
ASTM C 192	Standard Practice for Making and Curing Concrete Test Specimens in the Laboratory
ASTM C 293	Standard Test Method for Flexural Strength of Concrete (Using Simple Beam with Center-Point Loading)
ASTM C 78	Standard Test Method for Flexural Strength of Concrete (Using Simple Beam with Third-Point Loading)
ASTM C 42	Standard Test Method for Obtaining and Testing Drilled Cores and Sawed Beams of Concrete
ASTM C 174	Standard Test Method for Measuring Thickness of Concrete Elements Using Drilled Concrete Cores
ASTM C 143	Standard Test Method for Slump of Hydraulic-Cement Concrete
ASTM C 494	Standard Specification for Chemical Admixtures for Concrete
ASTM C 1017	Standard Specification for Chemical Admixtures for use in Producing Flowing Concrete
ASTM C 171	Standard Specification for Sheet Materials for Curing Concrete
ASTM C 309	Standard Specification for Liquid Membrane-Forming Compounds for Curing Concrete
ASTM 5329	Standard Test Methods for Sealants and Fillers, Hot

	Applied,For Joints and Cracks in Asphaltic and Portland Cement Concrete Pavements
ASTM D 5167	Standard Practice for Melting of Hot Applied Joint and Crack Sealant and Filler for Evaluation
ASTM A 706	Standard Specification for Low-Alloy Steel Deformed and Plain Bars for Concrete Reinforcement
ASTM A 966	Standard Test Method for Magnetic Particle Examination of Steel Forgings using Alternating Current
ASTM C 1064	Standard Test Method for Temperature of Freshly Mixed Hydraulic-Cement Concrete
ASTM C 1077	Standard Practice for Laboratories Testing Concrete and Concrete Aggregates for use in Construction and Criteria for Laboratory Evaluation
ASTM C 1107	Standard Specification for Packaged Dry, Hydraulic-Cement Grout (Non-shrink)
ASTM C 1116	Standard Specification for Fiber-Reinforced Concrete
ASTM C 1157	Standard Specification for Hydraulic Cement
ASTM C 138	Standard Test Method for Density (“Unit Weight”), Yield and Air Content (Gravimetric) of Concrete
ASTM C 173	Standard Test Method for Air Content of Freshly Mixed Concrete by the Volumetric Method
ASTM C 260	Standard Specification for Air-Entraining Admixtures for

Concrete

ASTM C 295	Petrographic Examination of Aggregates for Concrete
ASTM C 33	Standard Specification for Concrete Aggregates
ASTM C 42	Standard Test Method for Obtaining and Test Drilled cores and Sawed Beams of Concrete
ASTM C 469	Static Modulus of Elasticity and Poisson's Ratio of Concrete in Compression
ASTM C 595	Standard Specification for Blended Hydraulic Cements
ASTM C 1116	Standard Specification for Fiber-Reinforced Concrete and Shotcrete
ASTM C 1751	Preformed Expansion Joint Fillers for Concrete Paving and Structural Construction. (Non-extruding and Resilient Bituminous Types).
ASTM D 1179	Fluoride Ion in Water
ASTM D 1190	Standard Specification for Concrete Joint Sealer, Hot-Applied Elastic Type
ASTM D 1751	Standard Specification for Preformed Expansion Joint Filler for Concrete Paving and Structural Construction (Non-extruding and Resilient Bituminous Types)
ASTM E 329	Standard Specification for Agencies Engaged in the Testing and/ or Inspection of Materials used in Construction

c. American Welding Society (AWS)

D 12 Welding Reinforcing Steel, Metal Inserts and Connections Reinforced Concrete Construction.

d. Philippines National Standard (PNS)

PNS 49 Steel Bars for Concrete Reinforcement

e. DPWH Standard Specification

e. All other standards hereinafter indicated.

f. The edition or the revised version of such codes and standards current at the date twenty eight (28) days prior to date of bid submission shall apply. During Contract execution, any changes in such codes and standards shall be applied a after approval by the Owner.

SUBMITTALS

1. Test Reports and Certificates shall be furnished and approval received before delivery of certified or tested materials to the Project Sites.

a. Submit Test Reports for the following:

a. 1. Concrete mixture proportions

Submit copies of test reports by independent test labsconforming to ASTM C 1077 showing that the mixture has been successfully tested to produce concrete with the properties specified and that mixture will be suitable for the job conditions. Test reportsshall be submitted along with the concrete mixture proportions. Obtain approval before concrete placement. Fullydescribe the processes and methodology whereby mixtureproportions were developedand tested and how proportions will adjusted during progress of the work

to achieve, as closely aspossible, the designated levels of relevant properties.

a. 2. Aggregates

Submit test results for aggregate quality in accordance with ASTM C 33.Where there is potential for alkali-silica reaction, provide results of testsconducted in accordance with ASTM C 227 or ASTMC 1260. Submitresults of all tests during progress of the work in tabular and graphicalform as noted above, describing the cumulative combined aggregategrading and the percent of the combined retained on eachsieve.

a. 3. Admixtures

Submit test results in accordance with ASTM C 494 and ASTM C 1017for concrete admixtures, ASTM C 260 for air-entrainingagent, andmanufacturer's literature and test reports for corrosioninhibitor andanti-washout admixture. Submitted data shall be based upon testsperformed within 6 months of submittal.

a. 4. Cement

Submit test results in accordance with ASTM C 150 Portlandcement. Submit current mil data.

a. 5. Water

Submit test results in accordance with ASTM D 512 and ASTM D 516.

b. Submit Certificates for the following:

b. 1. Curing concrete elements

Submit proposed materials and methods for curing concrete elements.

b. 2. Form removal schedule

Submit proposed materials and methods for curing concrete elements.

b. 3. Concrete placement

Submit technical literature for equipment and methods proposed for use in placing concrete, Include pumping or conveying equipment including type, size and material for pipe, valve characteristics, and the maximum length and height concrete will be pumped. No adjustmentsshall be made to the mixture design to facilitate pumping.

Submit technical literature for equipment and methods proposedfor Vibrating and compacting concrete. Submittal shall include technical literature describing the equipment including vibrator diameter, length, frequency, amplitude, centrifugal force, and manufacturer's descriptionof the radius of influence under load. Where flat work is to be cast, provide similar information relative to the proposed compacting screedor other method to ensure dense placement.

2. The Contractor shall submit shop drawings and erection drawings for formwork at least 14 days prior to commencing the work.

Each shop drawing and erection drawing shall bear the signature of a Contractor'squalified Engineer. Details of all proposed formwork to be Prefabricated andFormwork to produce special finishes shall be submittedto the engineer for approval before any materials are ordered. If the engineerso requires, samples of proposedformworks shall be constructed and concrete placed at the Contractor's expense sothat the proposed methods and finished effect can be demonstrated.

The Contractor shall submit shop drawings showing reinforcing bar placing and barlists for the Engineer's approval. Such shop drawings shall show also supplementalbars for forming, strengthening frames of bars of sufficient rigidity to withstandforces during placing concrete. If necessary, shaped steelmay be added toimprove rigidity of the frame of bar.Such shop drawings shall clearly indicate bar sizes, spacing, location and quantitiesof reinforcement, mesh, chairs, spacers and other details to be as per ACI Manualof Standard Practice for Detailing Reinforced Concrete Structures.

Details shall be prepared for placement of reinforcement where special conditionsoccur, including most congested areas and connection between pre-cast concreteand concrete in-situ.

All shop drawings shall be reviewed by the Engineer within seven (7) days after receiving them. At least two (2) days prior to pouring concrete, the Contractor shallsubmit to the Engineer a pouring permit for his inspection and approval.

MATERIAL REQUIREMENTS

CEMENT

Unless otherwise specified in the Drawings, only one (1) brand of cement shall be used for any individual structure. In determining the approved mix, only Portland cement shall be used as the cementitious material.

1. Portland Cement: ASTM C 150

Type II (for general use, more especially when moderate Sulfate resistance is desired)

ADMIXTURE (IF NECESSARY)

Unless otherwise required by field conditions, admixture may be used subject to the expressed approval of the Engineer. The cost of which shall already be included in the unit cost bid of the Contractor for the concrete.

1. Air Entraining Admixture shall conform to ASTM C 260
2. Admixture other than air entraining agent shall conform to ASTM C 494
3. Admixture containing chloride ions, or other ions producing deleterious effect shall not be used.

AGGREGATES

1. Crushed Coarse Aggregate

Conforming to ASTM C 33 and having nominal sizes passing 38.0 mm to 19.0 mm, 19.0 mm to 9.5 mm to No. 4 sieve. The material shall be well graded between the limits indicated and individually stockpiled. It shall be the Contractor's responsibility to blend the materials to meet the gradation requirements for various types of concrete as specified herein.

Nominal sizes for combined gradation shall be as follows:

ASTM Sieves	**Nominal Size of Coarse Aggregates**			
	% by Weight Passing			
	40mm	**25mm**	**19mm**	**10mm**
50.0mm (2")	100	-	-	-
38.0mm (1 ½")	95-100	100	-	-
31.8mm (1 1/4")	-	90-100	100	-
25.0mm (1")	-	-	90-100	-
19.0mm (3/4")	35-70	25-90	-	100
16.0mm (5/8")	-	-	20-55	85-100

9.5mm (3/8”)	10-30	0-10	0-10	0-20
No. 4	0-5			

2. Fine Aggregate

ASTM C 33 except for gradation which has been revised to meet local conditions unless otherwise required by the Engineer, grading of find aggregate shall be as follows:

ASTM Sieves	% by Weight Passing
9.5mm (3/8”)	100
No. 4	90-100
No. 8	80-100
No. 16	50-90
No. 30	25-60
No. 50	5-30
No. 100	0-10

a. Grading of fine aggregates shall be reasonably uniform and fineness modulus thereof shall not vary more than 0.2 from that of the representative sample in which mix proportions of concrete are based.

b. Due care shall be taken to prevent segregation.

WATER

The mixing water shall be clear and apparently clean. If it contains quantities or substances that discolor it or make it smell or taste unusual or objectionable, or cause suspicion, it shall not be used unless service records of concrete made with it (or other information) indicated that it is not injurious to the quality, shall be subject to the acceptance criteria as shown in Table 6.3 and Table 6.4 or as designated by the purchaser.

When wash water is permitted, the producer will provide satisfactory proof or data of non-detrimental effects if potentially reactive aggregates are to be used. Use of wash water will be discontinued if undesirable reactions with admixtures or aggregates occur.

Table 6.3 Acceptance Criteria for Questionable Water Supplies

Test	Limits
Compressive strength, min. % Control at 7 days	90
Time of Setting deviation from control	From 1:00 earlier to 1:30 later
Time of Setting (Gilmore Test) Initial Final Set	
Appearance	Clear
Color	Colorless
Odor	Odorless
Total Solids	500 parts/million max.
PH value	4.5 to 8.5

Tabl

e 6.4 Chemical Limitation for Wash Water

	Limits
Chemical Requirements, Minimum Concentration Chloride as $C1^{(-1)}$ expressed as a mass percent of cement when added to the in the other components of the concrete mixtures shall not exceed the following levels:	
1. Prestressed Concrete	0.06 percent
2. Conventionally reinforced concrete in a moist environment and exposed to chloride	0.10 percent
3. Conventionally reinforced concrete in a moist environment but not exposed to chloride	0.15 percent
4. Above ground building construction where the concrete will stay dry	No limit for corrosion
Sulfate as SO_4, ppm[A]	3,000
Alkalies as (Na_2O + 0.658 K_2O), ppm	600
Total Solids, ppm	50,000

Wash water reused as mixing water in concrete may exceed the listed concentrations of sulfate if it can be shown that the concentration calculated in

the total mixing water, including mixing water on the aggregate and othersources, does not exceed thatstated limits.

Water will be tested in accordance with, and shall meet the suggested requirements of AASHTO T 26.

Water known to be of potable quality may be used without test.

CURING MATERIALS

1. Impervious Sheet Materials

   ASTM C 171 type, optional, except that polyethylene film, if used, shall be white opaque

2. Burlap of commercial quality, non-staining type, consisting of 2 layers minimum.

3. Membrane Forming Curing Compound

   ASTM C 309; submit evidence that product conforms to specifications.

EPOXY BONDING COMPOUND

ASTM C 881. Provide Type I for Bonding hardened concrete to hardened concrete; Type II for bonding freshly mixed concrete to hardened concrete; and Type III as a binder in epoxy mortar or concrete, or for use in bonding skid-resistant materials to hardened concrete. Provide Class B if placement temperature is between 4 and 16°C; or Class C if placement temperature is above 16°C.

REINFORCEMENT

Steel reinforcement, other than Steel for Pre-stressing, used in Reinforced Concrete, shall conform to ASTM and PNS as follows:

ASTM Designation A615 – Deformed Billet Steel Bars for Concrete Reinforcement.Minimum yield strength of 276 MPa (40,000 psi).

PNS 49 – Steel Bars for Concrete Reinforcement

TIE WIRE

Tie wire shall be plain, cold drawn annealed steel wire 1.6 mm diameter.

SAMPLES AND TESTING

1. Cement

Sampled either at the mil or at the site of work and tested by an independent commercial or government testing laboratory duly accredited by the Bureau of Research and Standards (BRS) of the DPWH, Department of Science and Technology (DOST) or the Department of trade and Industry (DTI) at no additionalcost to PPA. Certified copies of laboratory test reports shall be furnished for eachlot of cement and shall include all test data, results, and certificates that thesampling and testing procedures are in conformance with the Specification. Nocement shall be used until notice has been given bythe Engineer that the testresults are satisfactory. Cement that has been stored, other than in bins at theat the mills, for more than 3 months after delivery to the Site shall be re-testedbefore use. Cement delivered at the Site and later found after test to be unsuitableshall not be incorporated into the permanent works.

2. Aggregates: Tested as prescribe in ASTM C 33

At least 28 days prior to commencing the work, the Contractor shall informthe Engineer of the proposed sourceof aggregates and provide access for sampling.

Gradation tests will be made on each sample without delay. All other aggregates tests required by these Specifications shall be madeon the initial source samples,and shall be repeated whenever there is achangeof source. The tests shallinclude an analysis of each grade of material and ananalysisof

the combinedmaterial representing the aggregate part of the mix.

3. Reinforcement

Certified copies of mill certificates shall accompany deliveries of steelbar reinforcement. If requested by the Engineer additional testing of the materials shallbe made at the Contractor's expense.

4. Concrete Tests

For test purposes, provide 1 set of three (3) concrete cylinder samples taken fromEach day's pouring and to represent not more than 75 cumof concrete class orfraction thereof of concrete placed. Samples shall be secured in conformance withASTM C 172. Tests specimens shall be made, cured, and packed for shipment inaccordance with ASTM C 31. Cylinders will betested by and at the expense of theContractor in accordance with ASTM C 39. Test specimens will be evaluatedseparately by the Engineer, for meeting strength level requirements for each withconcrete quality of ACI 318. When samples fail to conform to the requirements forstrengths, the Engineer shall have the right to order a change in the proportions ofthe concrete mix for the remaining portions of the work at no additional cost to the Authority.

5. Test of Hardened Concrete in or Removed from the Structure

When the results of the strength tests of the concrete specimens indicates the concrete as placed does not meet the Specification requirements or where thereare other evidences that the quality of concrete is below thespecification requirement in the opinion of the Engineer, tests on cores of of in-place concreteshall be made in conformance with ASTM C 42.

Core specimens shall be obtained by the Contractor and shall be tested. Anydeficiency shall be corrected or if the Contractor elects, hemay submita proposalfor approval before the load test is made. If the proposal is approved, the load testshall be made by the Contractor and the test results evaluated by the Engineer inconformance with Chapter 20 of ACI 318. The cost of theload

tests shall be bomeby the Contractor. If any concrete shows evidenceof failure during the load test,or fails the load test as evaluated, the deficiencybe corrected in a manner approved by the Engineer at no additional costto the Authority.

6. Chemical admixtures/additives if approved shall conformed to ASTM C 494 and ASTM C 1017. The testing shall be conducted with cement and aggregate proposed for the Project. The admixtures/additives shall be tested and those thathave been in storage at the Project Site for longer thansix (6) monthsshall not beused until proven by retest to be satisfactory.

   Samples of any admixtures/additives proposed by the Contractor and shall be submitted for testing at least 56 days in advance of use, which shall require approval of the Engineer. Testing of admixtures/additives proposed by the Contractor including test mixing and cylinder test shall be at the Contractor's expense.

7. Jointing Materials and Curing Compound Samples

   At least 28 days prior to commencing the work, the Contractor shall submit to theEngineer for his approval samples of the following materialsproposed for usetogether with manufacturer's certificate.

   a. 10 kg of joint sealant
   b. 1m length of joint filler
   c. 5 li. of curing compound
   d. 1m length of joint backing

   The Engineer shall deliver to the Contractor his assessment on the materials within seven (7) days after receiving them.

EXECUTION

DELIVERY, STORAGE AND HANDLING OF MATERIALS

1. Cement

Do not deliver concrete until vapor barrier, forms, reinforcement, embedded itemsand chamfer strips are in place and ready for concreteplacement.ACI 301 andASTM A 934 for job site storage of materials. Protectmaterialsfrom contaminantssuch as grease, oil, and dirt. Ensure materials can beaccurately identified afterbundles are broken and tags removed.

Immediately upon receipt at the Site, the cement shall be stored separately in adry weathertight, properly ventilated structures with adequateprovisions for prevention of absorption of moisture. Storage accommodations for concrete materials shall be subject to approval and shall afford easy access for inspectionand identification of each shipment in accordance with the test reports.

Cement shall be delivered to the Site in bulk or in sound and properly sealed bags and while being loaded or unloaded and during transit to the concrete mixers whether conveyed in vehicles or in mechanical means, cement shall be protected from whether by effective coverings. Efficient screens shall be suppliedand erected during heavy winds.

If the cement is delivered in bulk, the Contractor shall provide, at his own cost, approved silos of adequate size and numbers to store sufficient cement to ensure continuity of work and the cement shall be placed in these silos immediately after it has been delivered to the Site. Approved precautionsshall be taken intoconsideration during unloading to ensure that the resulting dust does notconstitute a nuisance.

If the cement is delivered in bags, the Contractor shall provide, at his own cost,perfectly waterproofed and well ventilated sheds havinga floor ofwood or concrete raised at least 0.5m above the ground. The sheds shall belarge enoughto store sufficient cement to ensure continuity of the work and each consignmentshall be stacked separately therein to permit easy access for inspection, testing and approval. Upon delivery, the cement shall at once be placed in these shedsand shall be used in the order in which it has been delivered.

Cement bags should not be stacked more than 13 bags high. All cement shall beused within two months of the date of manufacture. If delivery conditions renderthis impossible, the Engineer may permit cement to be used up tothree (3)month after manufacturing, subject to such conditions including addition of extracement as he shall stipulate.

2. Aggregate

All fine and coarse aggregate for concrete shall be stored on close fitting, steel or concrete stages design with drainage slopes or in bins of substantial constructionin such a manner as to prevent segregation of sizes and to avoid thein such a manner as to prevent segregation of sizes and to avoid the inclusion ofdirt and other foreign materials in the concrete. All such bins shall be emptiedand cleaned at intervals of every six (6) months or as required by the Engineer.Each size of aggregate shall be stored separately unless otherwise approved by the Engineer.

Stockpiles of coarse aggregate shall be built in horizontal layers notexceeding 1.2 m in depth to minimize segregation.

FORMWORK

1. Forms

Designed, constructed, and maintained so as to insure that after removal of formsthe finished concrete members will have true surfaces free of offset, waviness orbulges and will conform accurately to the indicated shapes, dimensions, lines,elevations and positions. Form surfaces that will be in contact with concrete shallthoroughly cleaned before each use.

2. Design

Studs and wales shall be spaced to prevent deflection of form material. Forms joints shall be sufficiently tight to prevent leakage of grout and cement paste

during placing of concrete. Juncture of formwork panel shall occur atvertical control joints, and construction joints. Forms placed on successiveunits for continuous surfaces shall be fitted in accurate alignment to assure smooth completed surfaces free from irregularities and signs of discontinuity. Temporaryopening shall be arranged to wall and where otherwise required to Facilitatecleaning and inspection. Forms shall be readily removable without impact, shock,or damage to the concrete.

3. Form Ties

Factory fabricated, adjustable to permit tightening of the forms, removable or snap-off metal of design that will not allow form deflection and will not spall concrete upon removal. Bolts and rods that are to be completely withdrawn shallcoated with a non-staining bond breaker. Ties shall be of the typewhich providewatertight concrete.

4. Chamfering

External comers that will be exposed shall be chamfered, beveled, or rounded bymouldings placed in the forms or as indicated in the drawings.

5. Coatings

Forms for exposed surfaces shall be coated with form oil or form-release Agent before reinforcement is placed. The coating shall be a commercial formulation ofsatisfactory and proven performance that will not bond with, stain, or adverselyaffect concrete surfaces, and shall not impair subsequent treatment of concretesurfaces depending upon bond or adhesion nor impede the wetting of surfaces to be cured with water or curing compounds.The coating shall be used as recommended in the manufacturer’s printed or written instruction. Forms for unexposed surfaces may be wet with water in lieuof coating immediately before placing of concrete. Surplus coating on form surfaces and coating on reinforcement steel and construction joints shallbe

removed before placingconcrete.recommended in the manufacturer's printed or written instructions.

6. Removal of Forms shall be done in a manner as to prevent injury to the Concrete and to insure complete safety of the structure after the following conditions havemet. Where the structure as a whole is supported on shores, forms for beam andgirder sides, and similar vertical structural membersmay be removed beforeexpiration of curing period. Care shall be taken toavoid spalling the concretesurface or damaging concrete edges. Woodforms shall be completely removed.

Minimum stripping and striking time shall be as follows unless otherwise approved by the Engineer.

Vertical sides of beams, walls, and columns, lift not 12 hours exceeding 1.2m

Vertical sides of beams and walls, lift exceeding 1.2 m 36 hours Softlifts of mainslabs and beams (props left under) 5 days

Removal of props from beams and mains slabs and other work 10 days

7. Control Test

If the Contractor proposes to remove forms earlier than the period stated above,he shall be required to submit the results of control tests showing evidence thatconcrete has attained sufficient strength to permit removal of supporting forms.Cylinders required for control tests shall be provided in addition to thoseotherwise required by this Specification. Test specimens shall be removed frommolds at the end of 24 hours and stored in thestructure as near the points aspracticable, the same protection from the during curing as is given tothose portions of the structure which they represent, and shall not be removedfrom the structure for transmittal to the laboratory prior to expiration of threefourths of the proposed period before removal of forms. Cylinders will be testedby and at the expense of the Contractor.Supporting forms or shoring shall not be removed until control test specimens have

attained strength of at least 160 kg/sqcm. The newly unsupported portions of the structure shall not be subjected toheavy construction or material loading.

REINFORCEMENT

1. Reinforcement

Fabricated to shapes and dimensions shown and shall be placedwhere indicated. Reinforcement shall be free of loose or flakyrust and mill scaleor coating, and any other substance that would reduce or destroy the bond. Reinforcing steel reduced in section shall not be used. After any substantial delayin the work, previously placed reinforcing steel for future bonding shall beinspected and cleaned. Reinforcing steel shall not be bent or straightened in amanner injurious to the steel or concrete. Bars with kinks or bends not shown in adrawings shall not be placed. The used of heat to bendor straighten reinforcingsteel shall not be permitted. Bars shall be moved as necessary to avoidinterference with other reinforcing steel, conduits, or embedded items. If bars aremoved more than one bar diameter, theresulting arrangement of bars includingadditional bars necessary to meet structural requirements shall be approvedconcrete is placed. In slabs, beams and girders, reinforcing steel shall not bespliced at points of maximum stress unless otherwise indicated. Unless otherwiseshown in the drawings, laps or splices shall be 40 times the reinforcing bar diameter.

2. The nominal dimensions and unit weights of bars shall be accordance with the Following table:

Nominal Diameter (mm)	Nominal Perimeter (mm)	Nominal Sectional Area (sq.mm)	Unit Weight (kg/m)
10	31.4	78.54	0.616
12	37.7	113.10	0.888
16	50.3	201.10	1.579
20	62.8	314.20	2.466
25	78.5	490.90	3.854
28	88.0	615.70	4.833
32	100.5	804.20	6.313
36	113.1	1,017.60	7.991
40	125.7	1,256.60	9.864
50	157.1	1,963.50	15.413

3. Welding of reinforcing bars shall only be permitted where shown; all welding shown shall be performed in accordance with AWS D 12.1.

4. Exposed reinforcement bars, dowels and plates intended for bonding with future extensions shall be protected from corrosion.

5. Supports shall be provided in conformance with ACI 315 and ACI 318, unless otherwise indicated or specified.

6. Concrete Protection for Reinforcement

   a. The minimum concrete cover of reinforcement shall be as shown below unless otherwise indicated in the drawings.

   b. Tolerance for Concrete Cover of Reinforcing Steel other than Tendons.

Minimum Cover

7.5cm or more (marine structures and concrete cast against and permanently exposed to earth)

DESIGN STRENGTH OF CONCRETE

Concrete for pavement shall develop a minimum 28-day compressive cylinder strength of (3,500 psi) as indicated in the drawings.

TRIAL BATCH FOR CONCRETE

Thirty (30) calendar days before the start of concreting works, the Contractor shall submit design mixes and the corresponding test result made on sample thereof. Sampling and testing shall be in accordance with the ASTM Standard procedures for sampling and testing for the particular design strength(s) required.

The particulars of the mix such as the slump and the proportionate weights of cement, saturated surface dry aggregates and water used shall be stated.

The design mix for concrete to be used shall be submitted together with at least three (3) standard cylinder samples for approval at least one (1) month prior to the start of each concreting schedule. Such samples shall be prepared in the presence of the Engineer.

Standard laboratory strength tests for the 7, 14 and 28 days periods shall be taken to all concrete samples in addition to routine field test at cost to the Contractor. Only design mixes represented by test proving the required strength for 7, 14 and 28 days tests shall be allowed.

The cost of sampling, handling and transporting samples from jobsite to the laboratory and the cost of subsequent tests made until the desired mix is attained shall be for the account of the Contractor.

Slump Test shall be made in conformance with ASTM C143, and unless otherwise specified by the Engineer, slump shall be within the following limits:

Structural Element	**Slump for Vibrated Concrete**	
	Minimum	**Maximum**
Pavement Concrete	25mm	50mm
Pre-cast Concrete	50mm	70mm
Lean Concrete	100mm	200mm
Sacked Concrete	25mm	50mm
All other Concrete	50mm	90mm

Sampling: Provide suitable facilities and labor for obtaining representative samples of concrete for the Contractor's quality control and the Engineer' quality assurance testing. All necessary platforms, tools and equipment for obtaining samples shall be furnished by the Contractor.

MIXING CONCRETE

1. GENERAL

1. Concrete shall be thoroughly mixed in a mixer of an approved size and type that will insure a uniform distribution of the materials throughout the mass.

2. All concrete shall be mixed in mechanically operated mixers. Mixing plant and equipment for transporting and placing concrete shall be arranged with an ample auxiliary installation to provide a minimum supply of concrete in case of breakdown of machinery or in case the normal supply of concrete is disrupted. The auxiliary supply of concrete shall be sufficient to complete the casting of a section up to a construction joint that will meet the approval of the Engineer.

3. Equipment having components made of aluminum or magnesium alloys, which would be in contact with plastic concrete during mixing, transporting or pumping of Portland cement concrete, shall not be used.

4. Concrete mixers shall be equipped with adequate water storage and a device for accurately measuring and automatically controlling the amount of water used.
5. Materials shall be measured by weighing. The apparatus provided for weighing the aggregates and cement shall be suitably designed and constructed for this purpose. The accuracy of all weighing devices except that for water shall be such that successive quantities can be measured to within one percent of the desired amounts. The water measuring device shall be accurate to plus or minus 0.5 percent. All measuring devices shall be subjected to the approval of the Engineer. Scales and measuring devices shall be tested at the expense of the Contractor as frequently as the Engineer may deem necessary to insure their accuracy.

6. Weighing equipment shall be insulated against vibration or movement of other operating equipment in the plant. When the entire plant is running, the scale reading at cut-off shall not vary from the weight designated by the Engineer by more than one percent for cement, 1-½ percent for any size of aggregate, or one percent for the total aggregate in any batch.

7. Manual mixing of concrete shall not be permitted unless approved by the Engineer.

2. MIXING CONCRETE AT SITE

1. Concrete mixers may be of the revolving drum or the revolving blade type and the mixing drum or blades shall be operated uniformly at the mixing speed recommended by the manufacturer.

The pick-up and throw-over blades of mixers shall be restored or replaced when any part or section is worn 20 mm or more below the original height of the manufacturer's design. Mixers and agitators which have an accumulation of hard concrete or mortar shall not be used.

2. When bulk cement is used and the volume of the batch is 0.5 m^3 or more, the scale and weigh hopper for Portland cement shall be separate and distinct from the aggregate hopper or hoppers.

The discharge mechanism of the bulk cement weigh hopper shall be interlocked against opening before the full amount of cement is in the hopper. The discharging mechanism shall be interlocked against opening when the amount of cement in the hopper is underweight by more the one percent or overweight by more than 3 percent of the amount specified.

3. When the aggregates contain more water than the quantity necessary to produce a saturated surface dry condition, representative samples shall be taken and the moisture content determined for each kind of aggregate.

4. The batch shall be so charged into the mixer that some water enter in advance of cement and aggregates. All water shall be in the drum, by the end of the first quarter of the specified missing time.

5. Cement shall be batched and charged into the mixer by such means that it will not result in loss of cement due to the effect of wind, or in accumulation of cement on surfaces of conveyors or hoppers, or in other conditions which reduce or vary the required quantity of cement in the concrete mixture.

6. Where required, synthetic fibrous reinforcement shall be added directly to the concrete mixer after placing the sufficient amount of mixing water, cement and aggregates.

7. The entire contents of a batch mixer shall be removed from the drum before materials for a succeeding batch are place therein. The materials composing a batch except water shall be deposited simultaneously into the mixer.

8. All concrete shall be mixed for a period of not less than 3 minutes after all materials, including water, are in the mixer. During the period of mixing, the mixer shall operate at the speed for it has been designed.

9. Mixers shall be operated with an automatic timing device that can be locked by the Engineer. The time device and discharge mechanism shall be so interlocked that during normal operation no part of the batch will be discharge until the specified mixing time has elapsed.

10. The first batch of concrete materials placed in the mixer shall contain a sufficient excess of cement, sand, and water to coat the inside of the drum without reducing the required mortar content of the mix. When mixing is to cease for a period of one hour or more, the mixer shall be thoroughly cleaned.

11. In case of rubble concrete, proper mixture and placing of concrete and stones/rocks shall be in accordance to the approved plan. Methodology of work shall be approved by the Engineer.

3. MIXING CONCRETE IN TRUCKS

1. Truck mixers, unless otherwise authorized by the Engineer, shall be of the revolving drum type, watertight, and so constructed that the concrete can be mixed to insure a uniform distribution of materials throughout the mass. All solid materials for the concrete shall be accurately measured and charged into the drum at the proportioning plant. Except as subsequently provided, the truck mixer shall be equipped with a device by which the quantity of water added can be readily verified. The mixing water may be added directly to the batch, in which case a tank is not required. Truck mixers may be required to be provided with a means by which the mixing time can be readily verified by the Engineer.

2. The maximum size of batch in truck mixers shall not exceed the minimum rated capacity of the mixer as stated by the manufacture and stamped in metal on the mixer. Truck mixing shall, unless otherwise directed, be continued for not less than 100 revolutions after all ingredients, including water, are in the drum. The mixing speed shall not be less than 4 rpm, nor more than 6 rpm.

3. Mixing shall begin within 30 minutes after the cement has been added either to the water or aggregate, but when cement is charged into a mixer drum containing water or surface-wet aggregate and when the temperature is above 32 °C, this limit shall be reduced to 15 minutes. The limitation in time between the introduction of the cement to the aggregate and the beginning of the mixing may be waived when, in the judgement of the Engineer, the aggregate is sufficiently free from moisture, so that there will be no harmful effects on the cement.

4. When a truck mixer is used for transportation, the mixing time in stationary mixer may be reduced to 30 seconds and the mixing completed in a truck mixer. The mixing time in truck mixer shall be as specified for truck mixing.

JOINTS

1. No reinforcement, comer protection angles or other fixed metal items shall be run continuously through joints containing expansion-joint filler, through crack-control joints in slabs on grade and vertical surfaces.

2. Preformed Expansion Joint Filler

1. Joints with Joint Sealant

   At expansion joints in concrete slabs to be exposed, and at other joints indicated to receive joint sealant, preformed expansion-joint filler strips shall be installed at the proper level below the elevation with a slightly tapered, dressed-and-oiled wood strip temporarily secured to the top thereof to form a groove. When surface dry, the groove shall be cleaned of foreign matter, loose particles, and concrete protrusions, then filled flush approximately with joint sealant so as to be slightly concave after drying.

2. Finish of concrete at joints

Edges of exposed concrete slabs along expansion joints shall be neatly finished with slightly rounded edging tool.

3. Construction Joints

Unless otherwise specified herein, all construction joints shall be subject to approval of the Engineer. Concrete shall be placed continuously so that the unit will be monolithic in construction. Fresh concrete may be placed against adjoining units, provided the set concrete is sufficiently hard not to be injured thereby. Joints not indicated shall be made and located in a manner not to impair strength and appearance of the structure. Placement of concrete shall be at such rate that the surface of concrete not carried to joint levels will not have attained initial set before additional concrete is placed thereon. Lifts shall terminate at such levels as are indicated or as to conform to structural requirements as directed. If horizontal construction joints are required, a strip of 25mm square-edge lumber, beveled to facilitate removal shall be tacked to the inside of the forms at the construction joint. Concrete shall be placed to a point 25mm above the underside of the strip. The strip shall be removed one hour after the concrete has been placed. Any irregularities in the joint line shall be leveled off with a wood float, and all laitance removed. Prior to placing additional concrete, horizontal construction joints shall be prepared.

Construction Joint which is not indicated in the Drawings shall be located as to least affect the strength of the structure. Such locations will be pointed out by the Engineer.

PREPARATION FOR PLACING

Hardened concrete, debris and foreign materials shall be removed from the interior of forms and from inner surfaces of mixing and conveying equipment. Reinforcement shall be secured in position, and shall be inspected, and approved before placing concrete. Runaways shall be provided for wheeled concrete-handling equipment. Such equipment shall not be wheeled over reinforcement nor shall runaways be supported on reinforcement.

Notice of any concreting operations shall be served to the Engineer at least three (3) days ahead of each schedule.

PLACING CONCRETE

1. Handling Concrete

Concrete shall be handled from mixers and transported to place for final deposit in a continuous manner, as rapidly as practicable, and without segregation or loss of ingredients until the approved unit of work is completed. Placing will not be permitted when the sun, heat, wind or limitations of facilities furnished by the Contractor

prevent proper finishing and curing of the concrete. Concrete shall be placed in the forms, as close as possible in final position, in uniform approximately horizontal layers not over 40cm deep. Forms splashed with concrete and reinforcement splashed with concrete or form coating shall be cleaned in advance of placing subsequent lifts. Concrete shall not be allowed to drop freely more than 1.5m in unexposed work nor more than 1.0 m in exposed work; where greater drops are required, tremie or other approved means shall be employed.

2. Time Interval between Mixing and Placing

Concrete mixed in stationary mixers and transported by non-agitating equipment shall be placed in the forms within 30 minutes from the time ingredients are charged into the mixing drum. Concrete transported in truck mixers or truck agitators shall be delivered to the site of work, discharged in the forms within 45 minutes from the ingredients are discharged into the mixing drum. Concrete shall be placed in the forms within 15 minutes after discharged from the mixer at the jobsite.

3. Hot Weather Requirements

The temperature of concrete during the period of mixing while in transport and / or during placing shall not be permitted to rise above 36 °C. Any batch of concrete which had reached a temperature greater than 36 °C at any time in the aforesaid period shall not be placed but shall be rejected, and shall not thereafter be used in any part of the permanent works.

1. Control Procedures

   Provide water cooler facilities and procedures to control or reduce the temperature of cement, aggregates and mixing handling equipment to such temperature that, at all times during mixing, transporting, handling and placing, the temperature of the concrete shall be the greater than 36 °C

2. Cold Joints and Shrinkage

   Where cold joints tend to form or where surfaces set and dry too rapidly or plastic shrinkage cracks tend to appear, concrete shall be kept moist by fog sprays, or other approved means, applied shortly after placement, and before finishing.

3. Supplementary Precautions

   When the aforementioned precautions are not sufficient to satisfy the requirements herein above, they shall be supplemented by restricting work during evening or night. Procedures shall conform to American Concrete Institute Standard ACI 305.

4. Conveying Concrete by Chute, Conveyor or Pump

   Concrete may be conveyed by chute, conveyor, or pump if approved in writing. In requesting approval, the Contractor shall submit his entire plan of operation from the time of discharge of concrete from the mixer to final placement in the forms, and the steps to be taken to prevent the formation of cold joints in case the transporting of concrete by chute, conveyor or pump is disrupted. Conveyors and pumps shall be capable of expeditiously placing concrete at the rate most advantageous to good workmanship. Approval will

not be given for chutes or conveyors requiring changes in the concrete materials or design mix for efficient operation.

Section VII. Drawings

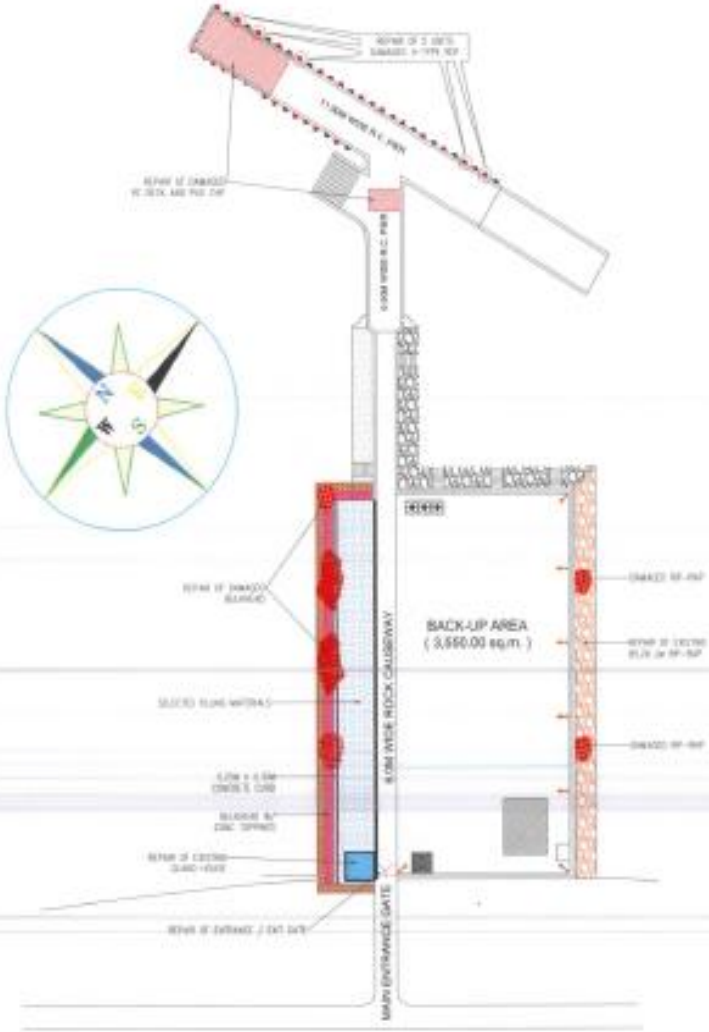

LOCATION PLAN
SCALE: NTS

GUARD HOUSE
PERSPECTIVE
SCALE: NTS

PHILIPPINE PORTS AUTHORITY
PMO ZAMBOANGA DEL NORTE

PROJECT TITLE:

EMERGENCY REPAIR OF RC DECK, PILE CAP, RIPRAP, GUARDHOUSE AND REPAIR/REPLACEMENT OF DAMAGED V-TYPE RDF AND USED TRUCK TIRES

PORT OF LAMAO, LILOY, ZAMBOANGA DEL NORTE

PREPARED BY:	CHECKED BY:	REVIEWED BY:	RECOMMENDING APPROVAL:	APPROVED BY:
ABDUL RAFFY B. PADDAM ELECTRICIAN FOREMAN	ENGR. BRYAN E. BALLON SENIOR ENGINEER - A	ENGR. DIOSDADO U. ARANAYDO PRINCIPAL ENGINEER A	ENGR. ABDURASAD S. HASAN ENGINEER	ENGR. SALVADOR L. DELINA PORT MANAGER

SHEET CONTENTS:
- LOCATION PLAN
- GUARDHOUSE PERSPECTIVE

SHEET NO.: 1 OF 22

DATE: OCT. 8, 2019

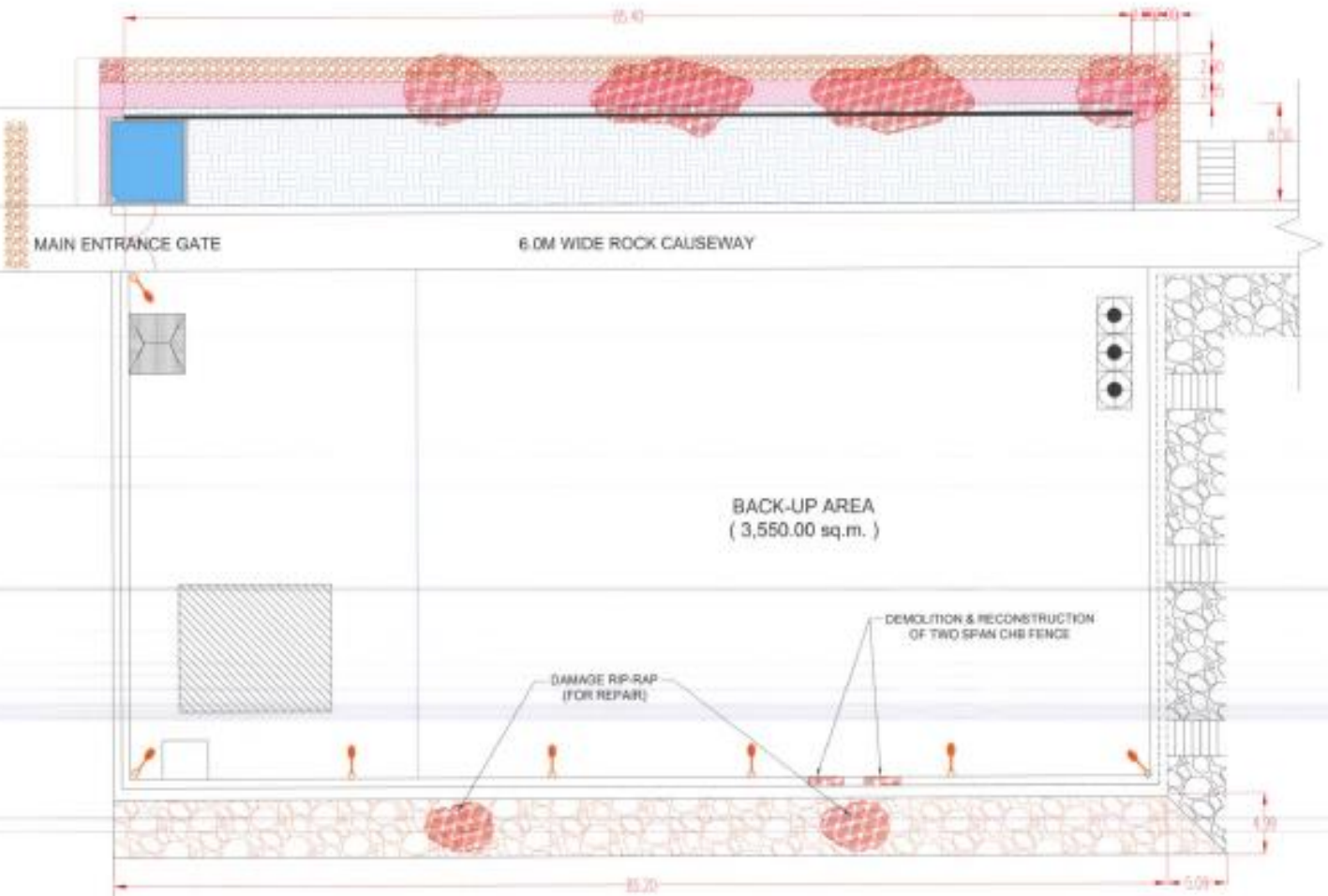

GENERAL PLAN 'A'

SCALE 1:30

LEGEND:

- 85.40LM 0.25M X 0.30M CONC. CURB
- SELECTED FILLING MATERIALS
- EXISTING ENTRANCE/EXIT GATE (FOR REPAIR)
- EXISTING GUARD HOUSE (FOR REPAIR)
- 100-300KG BULKHEAD W/ CCC. TOPPINGS
- 500-1000KG BULKHEAD
- EXISTING 85.20 LM RIP-RAP (FOR REPAIR)
- DAMAGE BULKHEAD/RIP-RAP (FOR REPAIR)

PHILIPPINE PORTS AUTHORITY
PMO ZAMBOANGA DEL NORTE

PROJECT TITLE:

EMERGENCY REPAIR OF RC DECK, PILE CAP, RIPRAP, GUARDHOUSE AND REPAIR/REPLACEMENT OF DAMAGED V-TYPE RDF AND USED TRUCK TIRES

PORT OF LAMAO, LILOY, ZAMBOANGA DEL NORTE

PREPARED BY:	CHECKED BY:	REVIEWED BY:	RECOMMENDING APPROVAL:	APPROVED BY:
ABDUL RAFFY B. PADDAM ELECTRICIAN FOREMAN	ENGR. BRYAN F. BALLON CIVIL ENGINEER - A	ENGR. DIOSDADO U. ARANAYDO PRINCIPAL ENGINEER II	ENGR. ABDURASAD S. HASAN AREA MANAGER	ENGR. SALVADOR L. DELINA PORT MANAGER

SHEET CONTENTS:
- LOCATION PLAN
- GUARDHOUSE PERSPECTIVE

SHEET NO.: 2 OF 22

DATE: OCT. 6, 2020

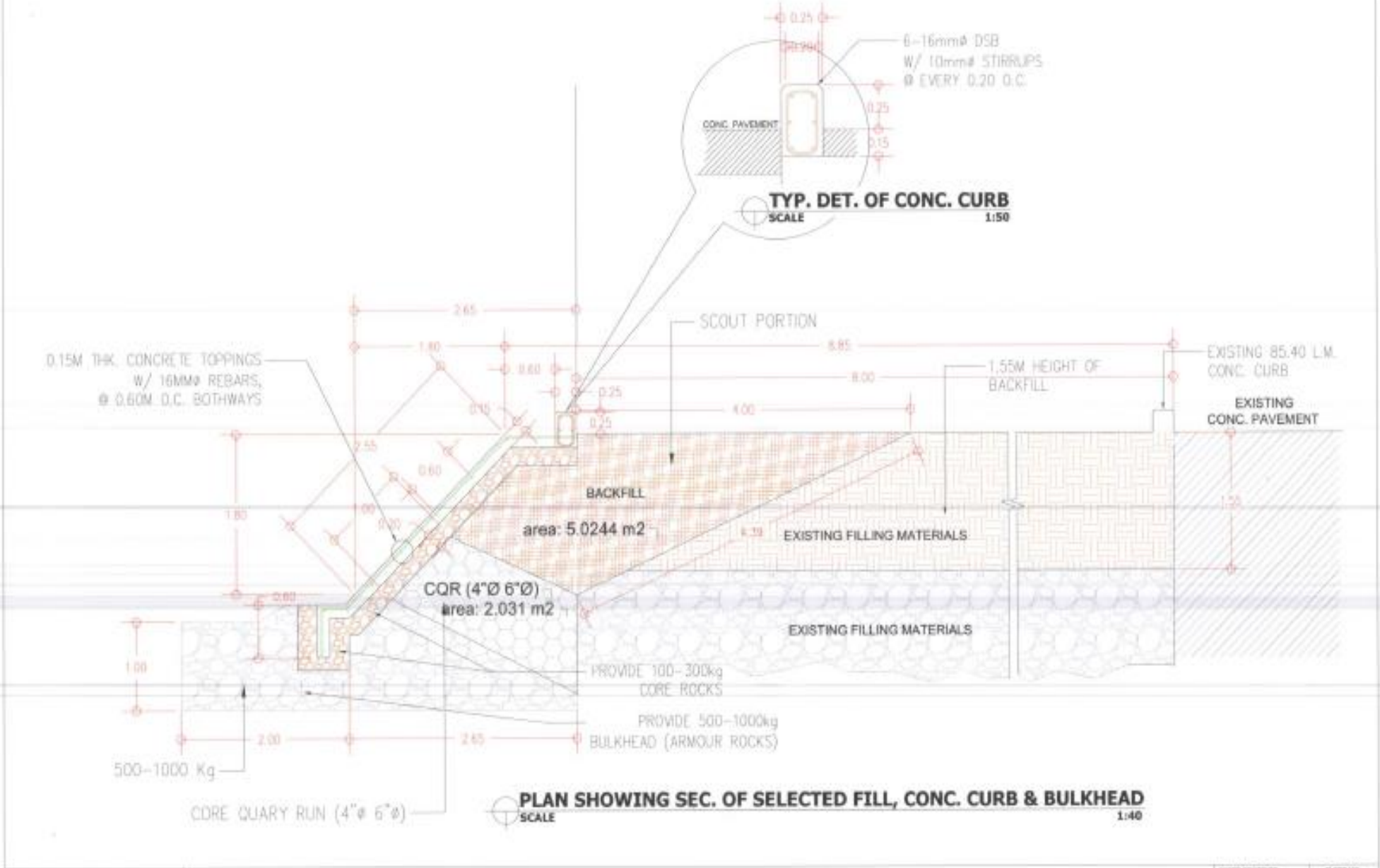

PHILIPPINE PORTS AUTHORITY
PMO ZAMBOANGA DEL NORTE

PROJECT TITLE:

EMERGENCY REPAIR OF RC DECK, PILE CAP, RIPRAP, GUARDHOUSE AND REPAIR/REPLACEMENT OF DAMAGED V-TYPE RDF AND USED TRUCK TIRES

PORT OF LAMAO, LILOY, ZAMBOANGA DEL NORTE

PREPARED BY:	CHECKED BY:	REVIEWED BY:	RECOMMENDING APPROVAL:	APPROVED BY:
ABDUL RAUF H. PADDAH ELECTRICAL FOREMAN	ENGR. BRYAN E. BALLON JUNIOR ENGINEER - A	ENGR. DEOSDADO U. ARANAYDO PRINCIPAL ENGINEER A	ENGR. ABDURASAD S. HASAN ESD MANAGER	ENGR. SALVADOR L. DELINA PORT MANAGER

SHEET CONTENTS:
- CONC. CURB
- BULKHEAD DETAILS

SHEET NO.: 3 OF 22

DATE: OCT. 8, 2020

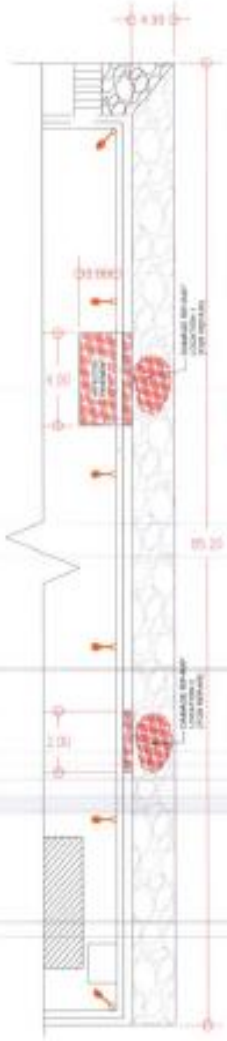

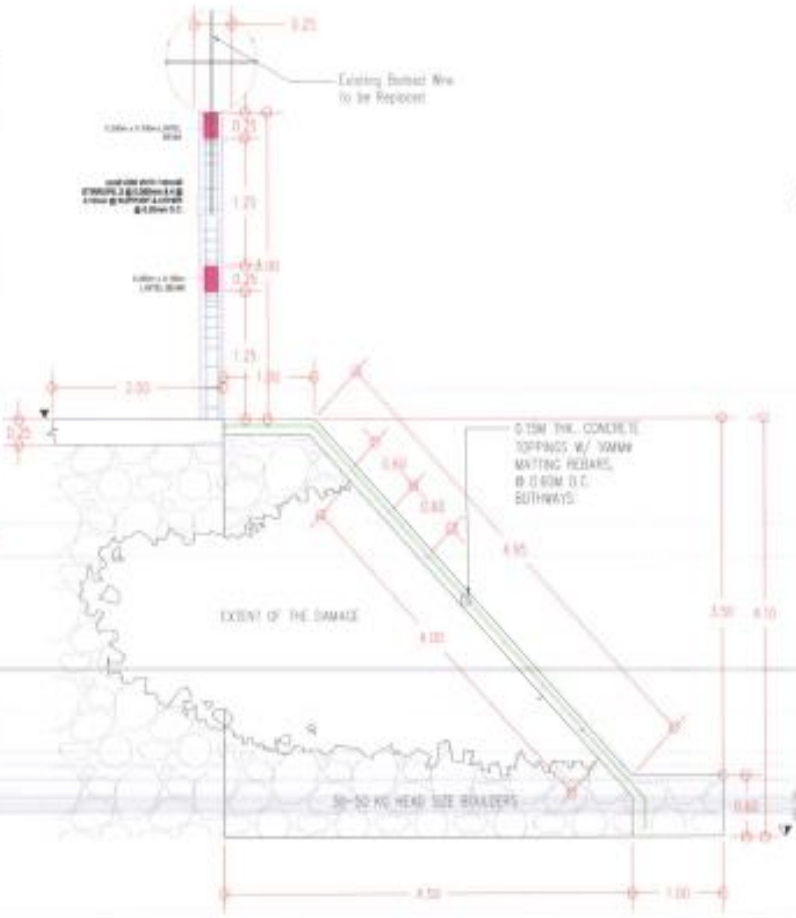

TYPICAL SEC. OF RIP-RAP AT LOCATION 1
SCALE 1:50

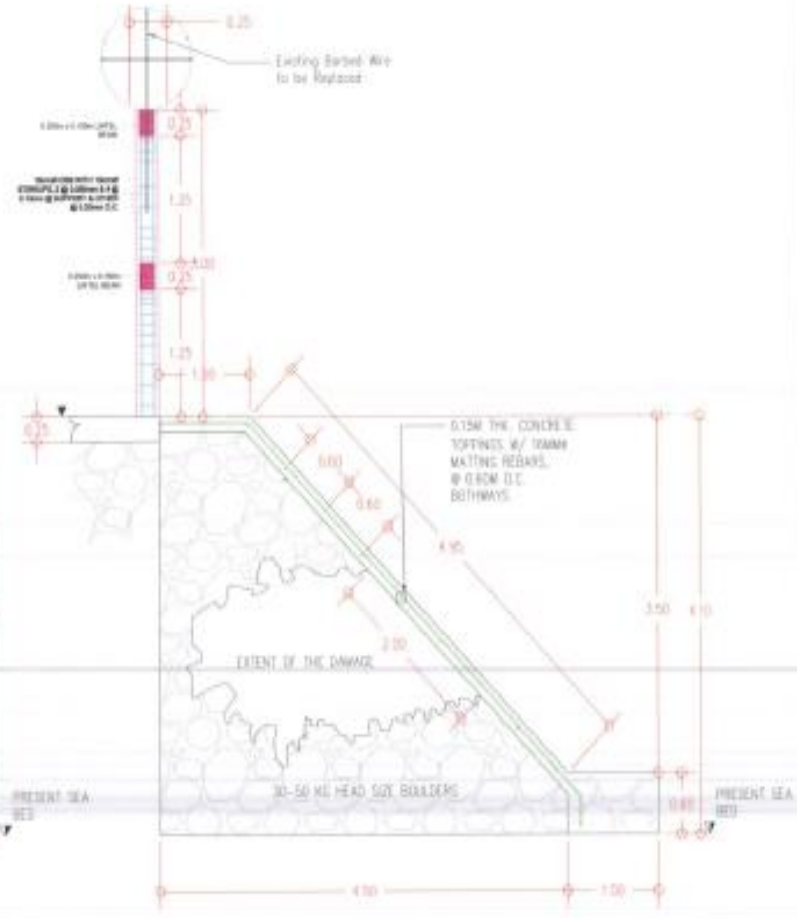

TYPICAL SEC. OF RIP-RAP AT LOCATION 2
SCALE 1:50

GENERAL PLAN

PHILIPPINE PORTS AUTHORITY
PMO ZAMBOANGA DEL NORTE

PROJECT TITLE:

EMERGENCY REPAIR OF RC DECK, PILE CAP, RIPRAP, GUARDHOUSE AND REPAIR/REPLACEMENT OF DAMAGED V-TYPE RDF AND USED TRUCK TIRES

PORT OF LAMAO, LILOY, ZAMBOANGA DEL NORTE

PREPARED BY:	CHECKED BY:	REVIEWED BY:	RECOMMENDING APPROVAL:	APPROVED BY:
ABDUL RAFFY H. PADDAM ELECTRICAL ENGINEER	ENGR. BRYAN E. BILLON SENIOR ENGINEER - A	ENGR. DIOSDADO U. ARANAYDO PRINCIPAL ENGINEER A	ENGR. ABDURASAD S. HASAN HEAD MANAGER	ENGR. SALVADOR T. DELINA PROJECT MANAGER

SHEET CONTENTS:	SHEET NO.:
• TYP. ELEVATION DETAILS OF FENCE • TYPICAL SEC. OF DAMAGED RIP-RAP	4 OF 22

DATE: OCT. 6, 2020

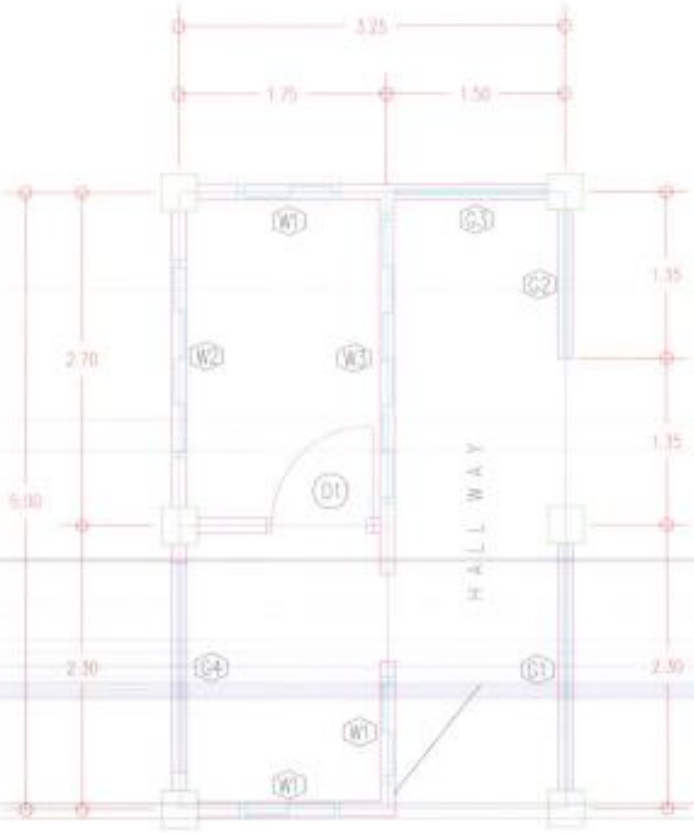

GUARD HOUSE FLR. PLAN
SCALE 1: 30

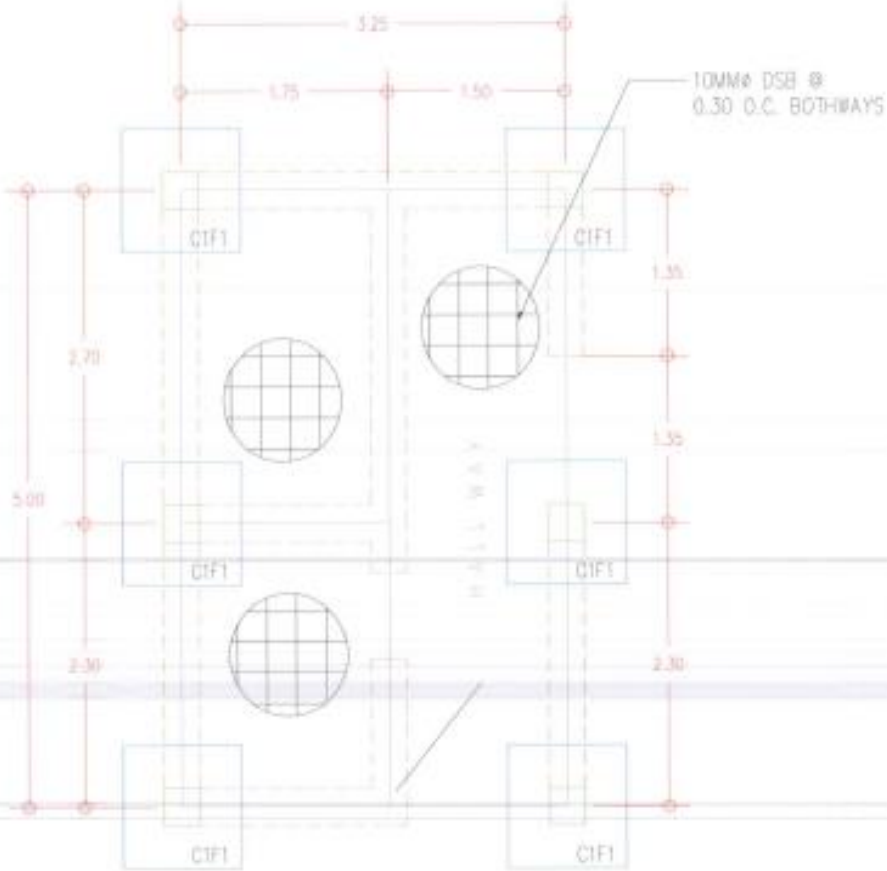

FOUNDATION PLAN
SCALE 1: 30

PHILIPPINE PORTS AUTHORITY
PMO ZAMBOANGA DEL NORTE

PROJECT TITLE:

EMERGENCY REPAIR OF RC DECK, PILE CAP, RIPRAP, GUARDHOUSE AND REPAIR/REPLACEMENT OF DAMAGED V-TYPE RDF AND USED TRUCK TIRES

PORT OF LAMAO, LILOY, ZAMBOANGA DEL NORTE

PREPARED BY:	CHECKED BY:	REVIEWED BY:	RECOMMENDING APPROVAL:	APPROVED BY:
ABDUL RAFFY H. PADDAM ELECTRICIAN FOREMAN	ENGR. BRYAN B. BALLON SENIOR ENGINEER - III	ENGR. DIOSDADO U. ARANAYDO PRINCIPAL ENGINEER A	ENGR. ABDURASAD S. HASAN EXD MANAGER	ENGR. SALVADOR L. DELINA PORT MANAGER

SHEET CONTENTS:	SHEET NO.:
• GUARDHOUSE FLOOR PLAN • GUARDHOUSE FOUNDATION PLAN	5 OF 22

DATE: OCT. 8, 2020

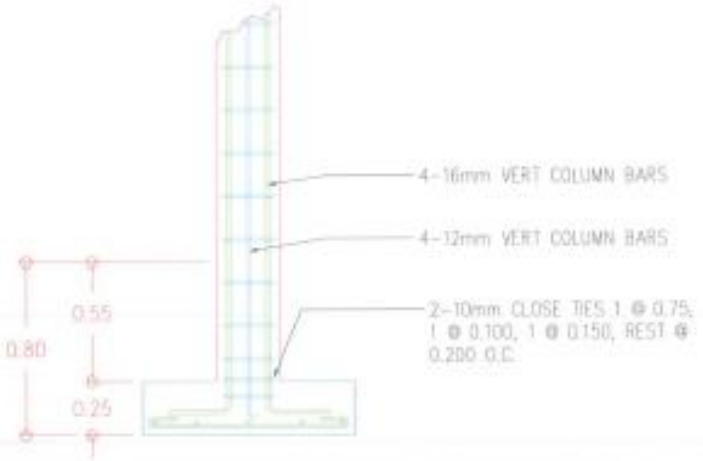

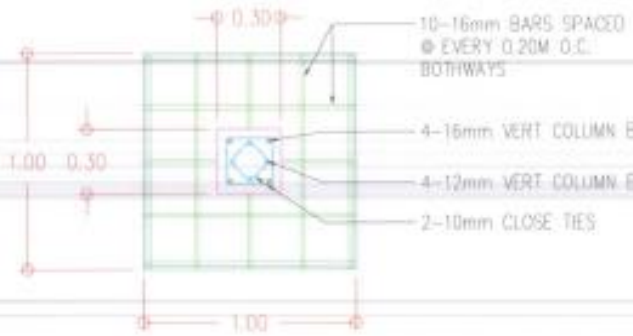

(C1, F1)
COLUMN FOOTING DET.
SCALE NTS

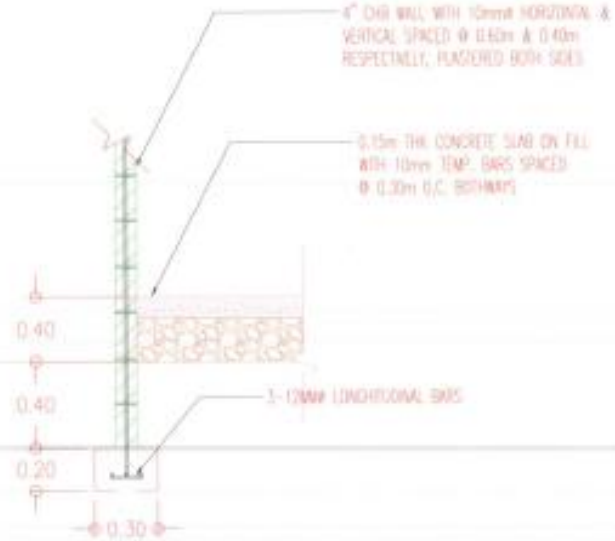

WALL FOOTING DET.
SCALE NTS

PHILIPPINE PORTS AUTHORITY
PMO ZAMBOANGA DEL NORTE

PROJECT TITLE:

EMERGENCY REPAIR OF RC DECK, PILE CAP, RIPRAP, GUARDHOUSE AND REPAIR/REPLACEMENT OF DAMAGED V-TYPE RDF AND USED TRUCK TIRES

PORT OF LAMAO, LILOY, ZAMBOANGA DEL NORTE

PREPARED BY:	CHECKED BY:	REVIEWED BY:	RECOMMENDING APPROVAL:	APPROVED BY:
ABDUL RAFFY H. PADDAM ELECTRICIAN FOREMAN	ENGR. BRYAN E. BALLON SENIOR ENGINEER - A	ENGR. DIOSDADO U. ARANAYDO PRINCIPAL ENGINEER A	ENGR. ABDURASAD S. HASAN ESD MANAGER	ENGR. SALVADOR L. DELDNA PORT MANAGER

SHEET CONTENTS:
- COLUMN FOOTING DETAILS
- WALL FOOTING DETAILS

SHEET NO.: 6 OF 22

DATE: OCT. 8, 2020

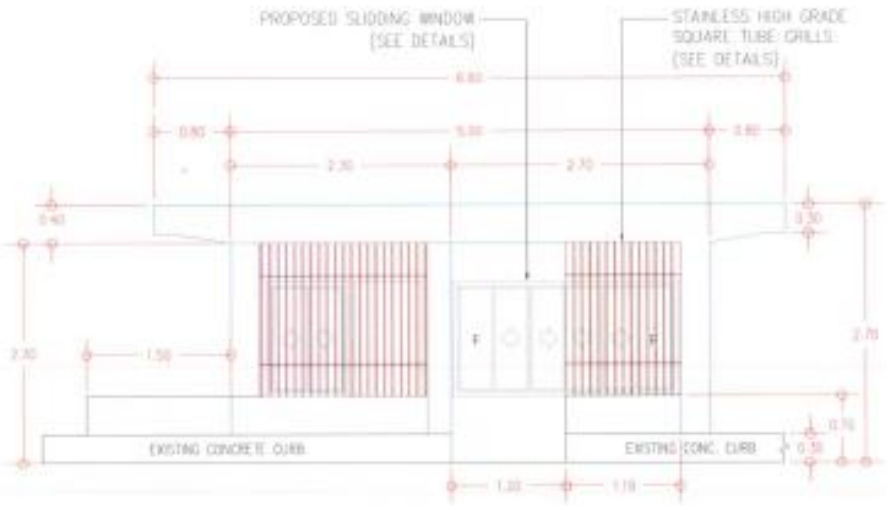

FRONT ELEV.
SCALE 1:50

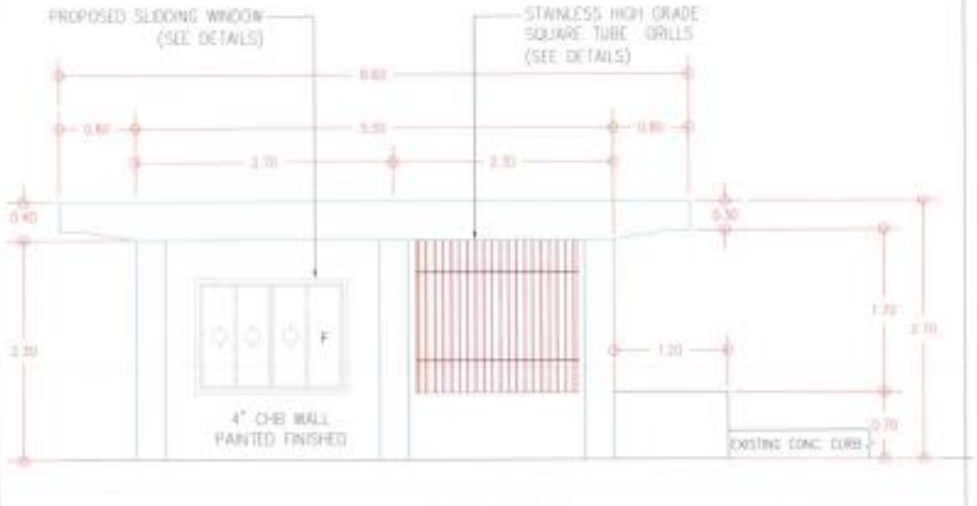

REAR ELEV.
SCALE 1:50

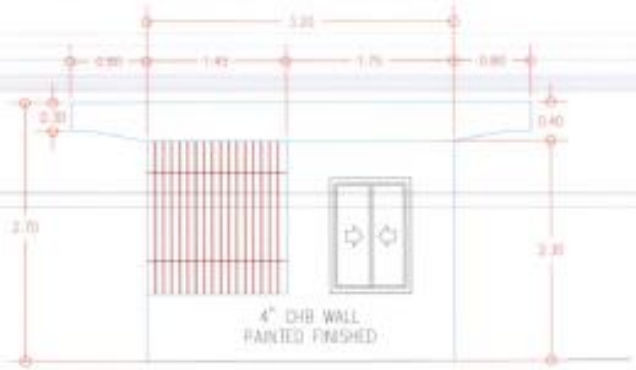

RIGHT SIDE ELEV.
SCALE 1:50

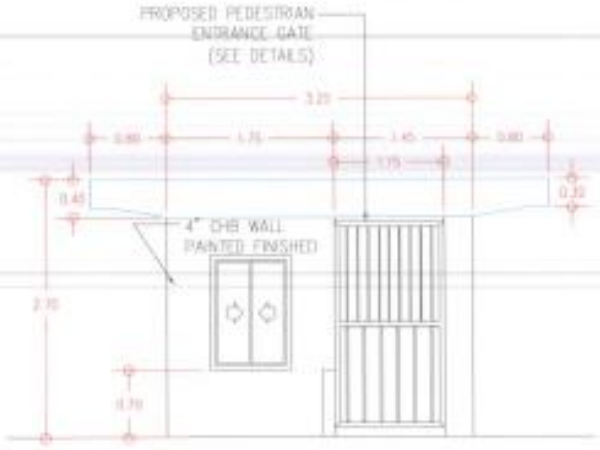

LEFT SIDE ELEV.
SCALE 1:50

PHILIPPINE PORTS AUTHORITY
PMO ZAMBOANGA DEL NORTE

PROJECT TITLE:

EMERGENCY REPAIR OF RC DECK, PILE CAP, RIPRAP, GUARDHOUSE AND REPAIR/REPLACEMENT OF DAMAGED V-TYPE RDF AND USED TRUCK TIRES

PORT OF LAMAO, LILOY, ZAMBOANGA DEL NORTE

PREPARED BY:	CHECKED BY:	REVIEWED BY:	RECOMMENDING APPROVAL:	APPROVED BY:
ABDUL RAHMAN H. PADDAM ELECTRICIAN FOREMAN	ENGR. BRYAN E. BALLON SENIOR ENGINEER - A	ENGR. DIOSDADO U. ARANAYDO PRINCIPAL ENGINEER A	ENGR. ABDORASAD A. HASAN END MANAGER	ENGR. SALVADOR L. DELINA PORT MANAGER

SHEET CONTENTS:	SHEET NO.:
• GUARDHOUSE ELEVATION PLAN	7 OF 22

DATE: OCT. 6, 2020

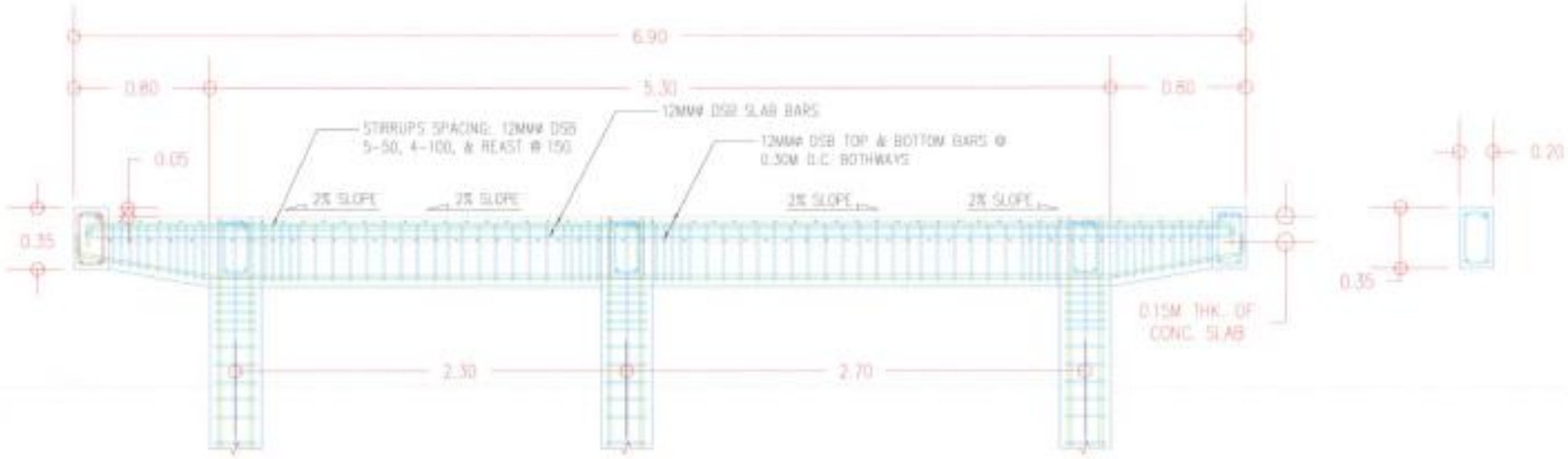

BEAM SECTION A-A

SCALE 1: 40

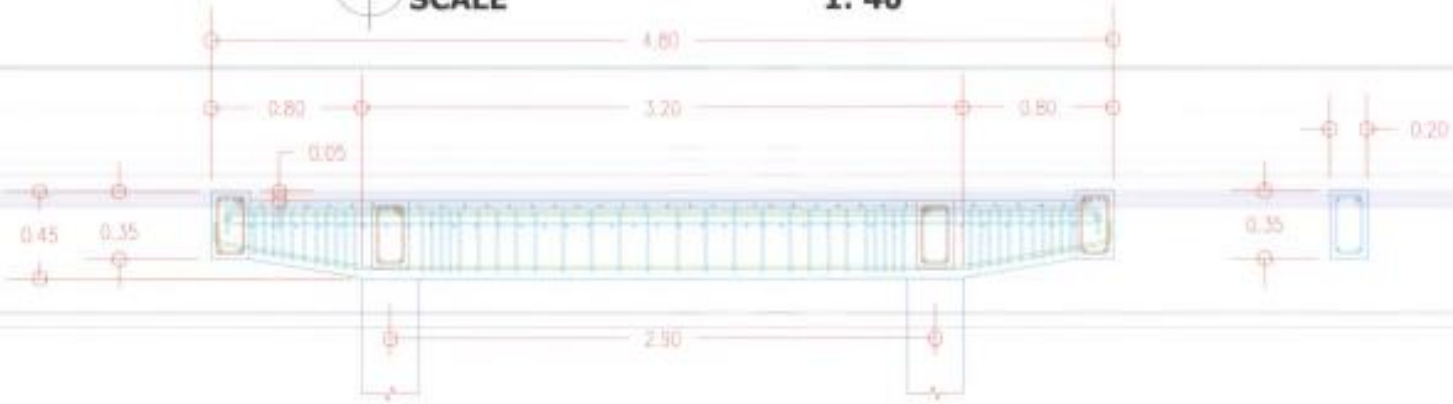

BEAM SECTION B-B

SCALE 1: 40

PHILIPPINE PORTS AUTHORITY
PMO ZAMBOANGA DEL NORTE

PROJECT TITLE:

EMERGENCY REPAIR OF RC DECK, PILE CAP, RIPRAP, GUARDHOUSE AND REPAIR/REPLACEMENT OF DAMAGED V-TYPE RDF AND USED TRUCK TIRES

PORT OF LAMAO, LILOY, ZAMBOANGA DEL NORTE

PREPARED BY:	CHECKED BY:	REVIEWED BY:	RECOMMENDING APPROVAL:	APPROVED BY:
ABDUL RAFFY H. PADDAM ELECTRICIAN FOREMAN	ENGR. BRYAN C. BALLON SENIOR ENGINEER - A	ENGR. DIOSDADO U. ARANAYDO PRINCIPAL ENGINEER A	ENGR. ABDURASAD S. RASAN ESD MANAGER	ENGR. SALVADOR C. DELINA PORT MANAGER

SHEET CONTENTS:	SHEET NO.:
• BEAM DETAILS	8 OF 22

DATE: OCT. 8, 2020

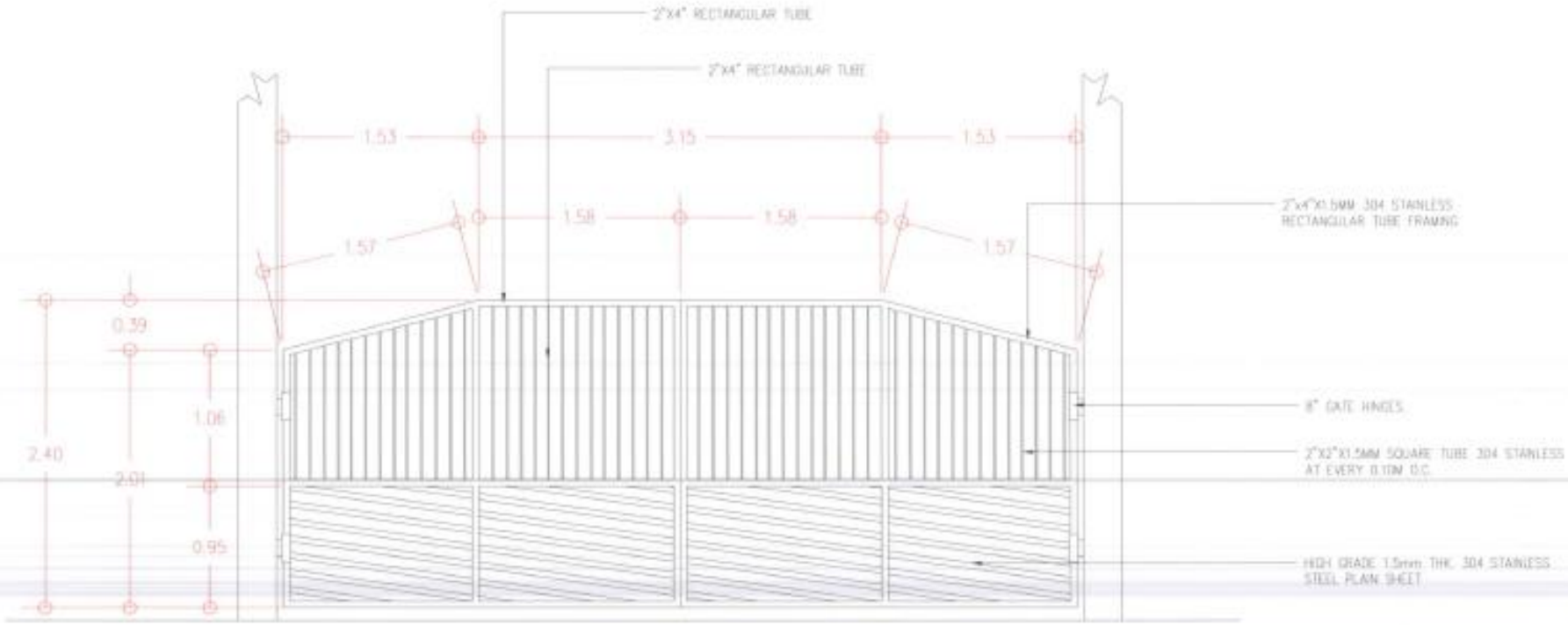

STAINLESS STEEL GATE DET.

SCALE **1:60**

PHILIPPINE PORTS AUTHORITY
PMO ZAMBOANGA DEL NORTE

PROJECT TITLE:

EMERGENCY REPAIR OF RC DECK, PILE CAP, RIPRAP, GUARDHOUSE AND REPAIR/REPLACEMENT OF DAMAGED V-TYPE RDF AND USED TRUCK TIRES

PORT OF LAMAO, LILOY, ZAMBOANGA DEL NORTE

PREPARED BY:	CHECKED BY:	REVIEWED BY:	RECOMMENDING APPROVAL:	APPROVED BY:
ABDUL RAFFY H. PADDAM ELECTROCIAN FOREMAN	ENGR. BRYAN E. BALLON SENIOR ENGINEER - A	ENGR. DIOSDADO U. ARANAYDO PRINCIPAL ENGINEER A	ENGR. ABDURASAD S. HASAN CO-MANAGER	ENGR. SALVADOR L. DELINA PORT MANAGER

SHEET CONTENTS:
- STAINLESS STEEL GATE DETAILS

SHEET NO.: 9 OF 22

DATE: OCT. 5, 2020

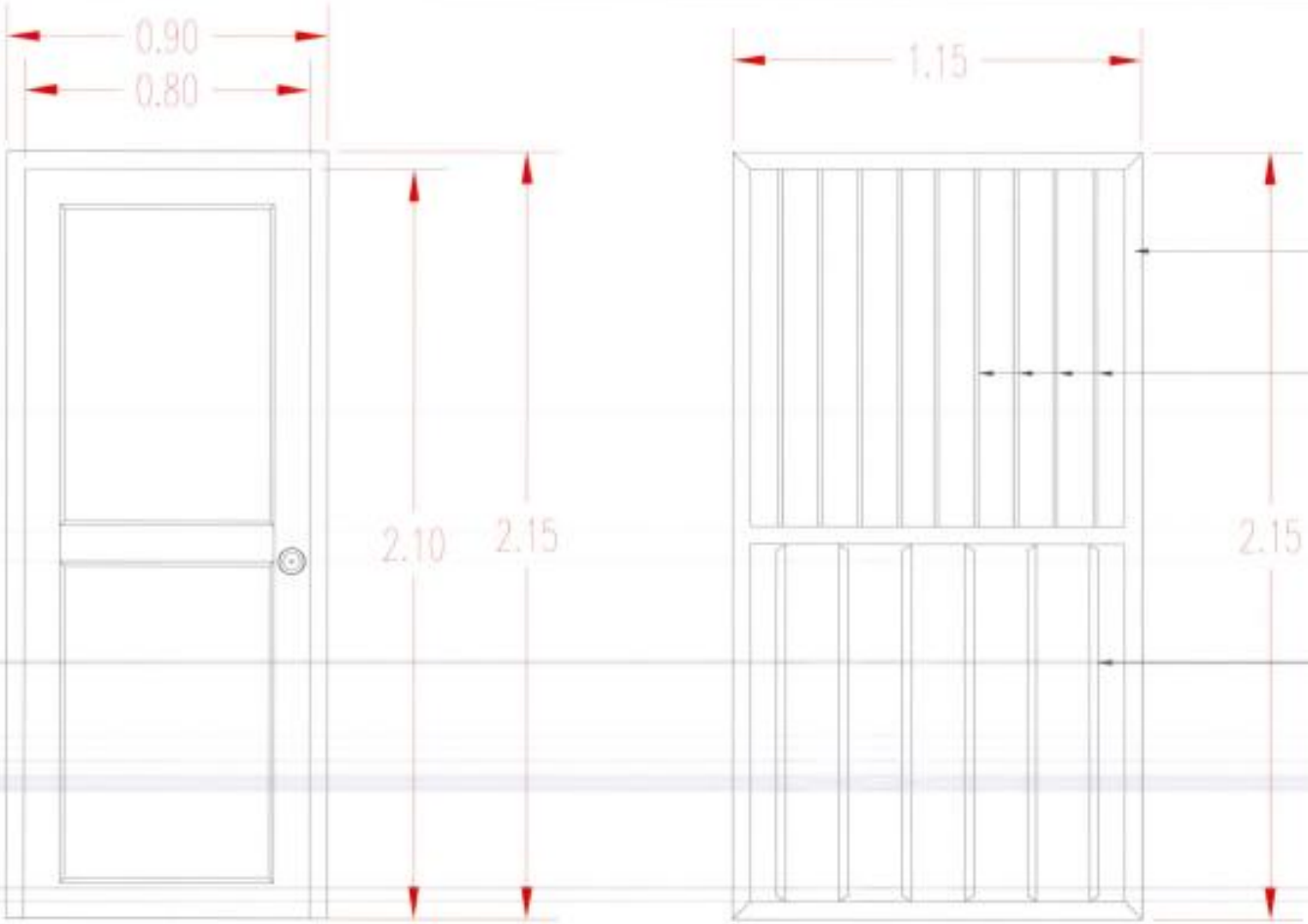

PROVIDE TWO(2) UNITS WOODEN DOORS

D1

PEDESTRIAN GATE

PHILIPPINE PORTS AUTHORITY
PMO ZAMBOANGA DEL NORTE

PROJECT TITLE:

EMERGENCY REPAIR OF RC DECK, PILE CAP, RIPRAP, GUARDHOUSE AND REPAIR/REPLACEMENT OF DAMAGED V-TYPE RDF AND USED TRUCK TIRES

PORT OF LAMAO, LILOY, ZAMBOANGA DEL NORTE

PREPARED BY:	CHECKED BY:	REVIEWED BY:	RECOMMENDING APPROVAL:	APPROVED BY:
ABDUL RAFIY H. PADDAM ELECTRICIAN JOURNEYMAN	ENGR. BRYAN C. BALLON SENIOR ENGINEER - A	ENGR. DIOSDADO U. ARANAYDO PRINCIPAL ENGINEER A	ENGR. ABDURASAD S. HASAN CSD MANAGER	ENGR. SALVADOR L. DELINA PORT MANAGER

SHEET CONTENTS:

- WOODEN DOOR DETAILS
- PEDESTRIAN STEEL GATE DETAILS

SHEET NO.: 10 OF 22

DATE: OCT. 8, 2020

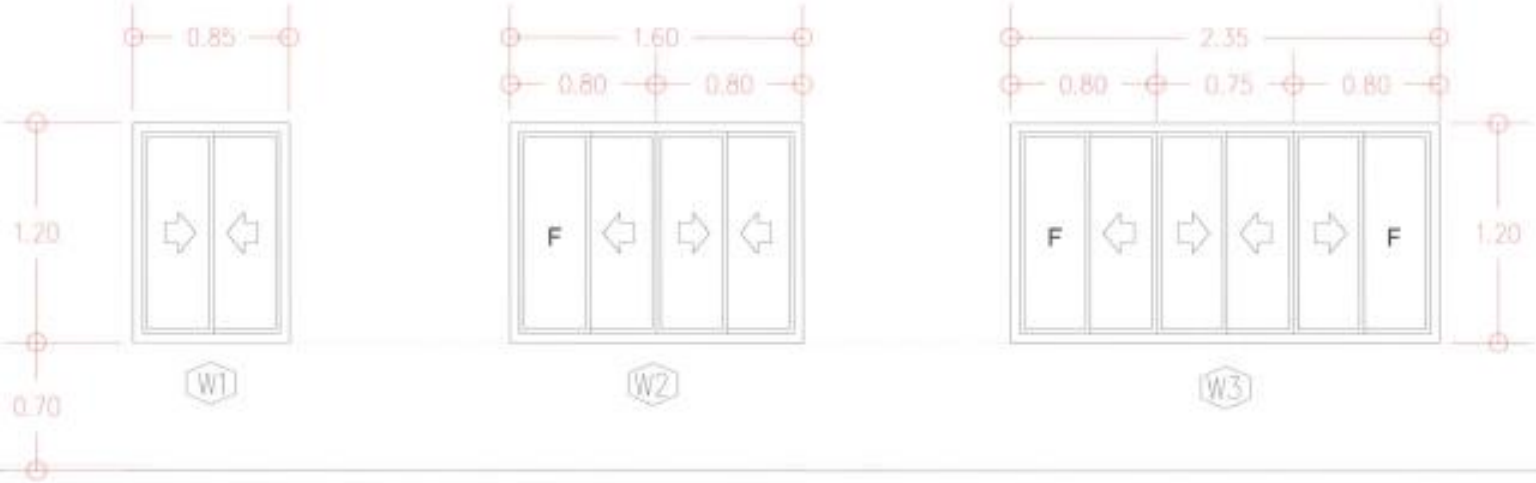

WINDOWS DIAGRAM

SCALE NTS

ITEM	A	B	C	NO.
W1	0.85	1.20	0.70	3
W2	1.60	1.20	0.70	1
W3	2.35	1.20	0.70	1

SCHEDULE OF WINDOWS

SCALE NTS

NOTE:

WINDOWS ARE POWDERED COATED FRAME W/ HEAVY DUTY MULLION.

AND $\frac{1}{4}$" THK. REFLECTIVE TYPE TEMPERED GLASS (UNLESS OTHERWISE SPECIFIED)

ALL DIMENSIONS ARE IN METERS.

PHILIPPINE PORTS AUTHORITY
PMO ZAMBOANGA DEL NORTE

PROJECT TITLE:

EMERGENCY REPAIR OF RC DECK, PILE CAP, RIPRAP, GUARDHOUSE AND REPAIR/REPLACEMENT OF DAMAGED V-TYPE RDF AND USED TRUCK TIRES

PORT OF LAMAO, LILOY, ZAMBOANGA DEL NORTE

PREPARED BY:	CHECKED BY:	REVIEWED BY:	RECOMMENDING APPROVAL:	APPROVED BY:
ABDUL KAFFY B. PADDAM ELECTRICIAN FOREMAN	ENGR. BRYAN E. BALLON SENIOR ENGINEER - A	ENGR. DIOSDADO U. ARANAYDO PRINCIPAL ENGINEER A	ENGR. ABDURASAD S. HASAN PMO MANAGER	ENGR. SALVADOR L. DELINA PORT MANAGER

SHEET CONTENTS:
- GUARDHOUSE WINDOWS SCHEDULES

SHEET NO.: 11 OF 22

DATE: OCT. 8, 2020

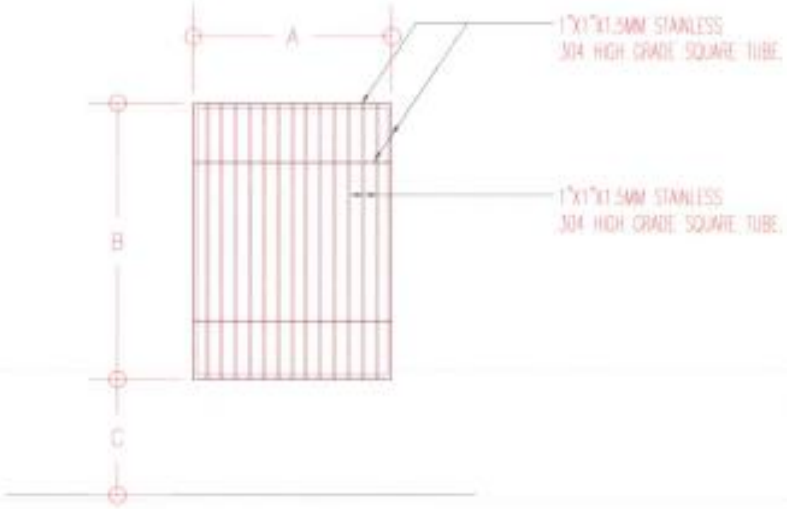

GRILLS DIAGRAM
SCALE NTS

ITEM	A	B	C	NO.
G1	2.00	1.60	0.70	1
G2	1.20	1.60	0.70	1
G3	1.30	1.60	0.70	1
G4	1.70	1.60	0.70	1

SCHEDULE OF GRILLS
SCALE NTS

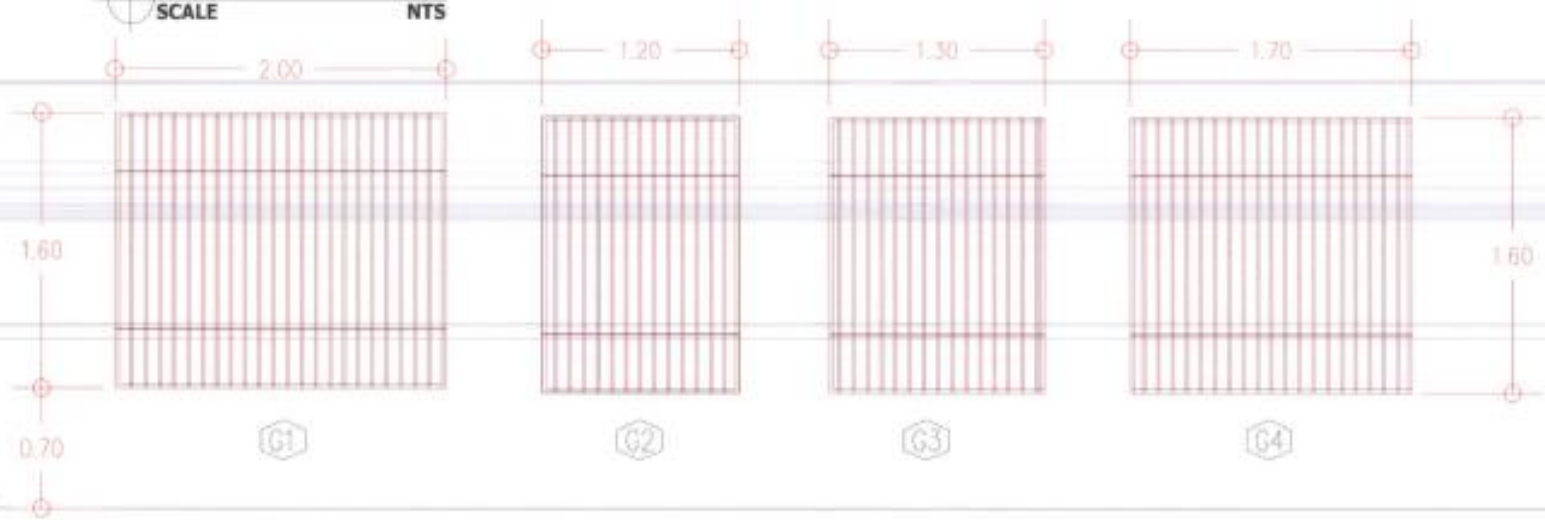

PHILIPPINE PORTS AUTHORITY
PMO ZAMBOANGA DEL NORTE

PROJECT TITLE:

EMERGENCY REPAIR OF RC DECK, PILE CAP, RIPRAP, GUARDHOUSE AND REPAIR/REPLACEMENT OF DAMAGED V-TYPE RDF AND USED TRUCK TIRES

PORT OF LAMAO, LILOY, ZAMBOANGA DEL NORTE

PREPARED BY:	CHECKED BY:	REVIEWED BY:	RECOMMENDING APPROVAL:	APPROVED BY:
ABDUL RAFFI H. PADDAM ELECTRICIAN FOREMAN	ENGR. BRYAN E. BALLON SENIOR ENGINEER - A	ENGR. DIOSDADO U. ARANAYDO PRINCIPAL ENGINEER A	ENGR. ABDURASAD S. HASAN ISO MANAGER	ENGR. SALVADOR L. DELINA PORT MANAGER

SHEET CONTENTS:
- GRILLS SCHEDULE AND ITS DIAGRAM

SHEET NO.: 12 OF 22

DATE: OCT. 8, 2020

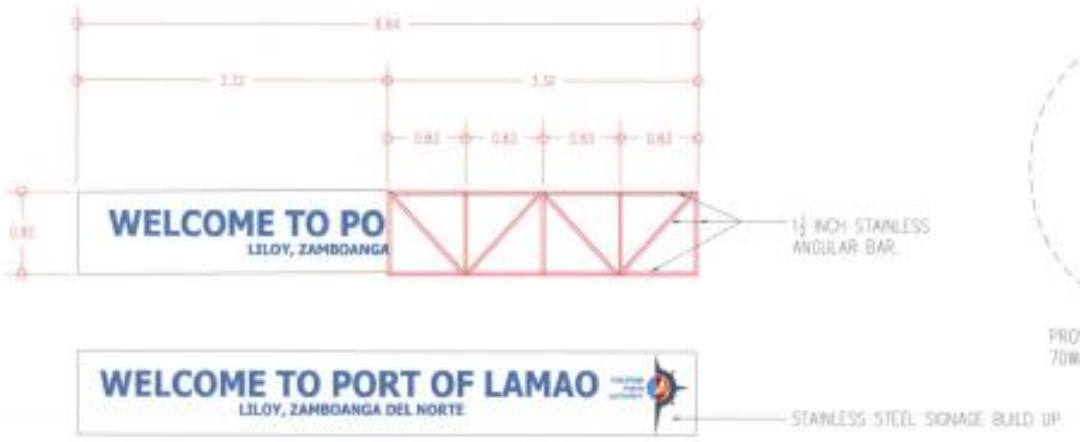

DET. OF PORT FRAMING SIGNAGE
SCALE 1:60

ISOMETRIC VIEW OF SIGNAGES FRAMING
SCALE 1:60

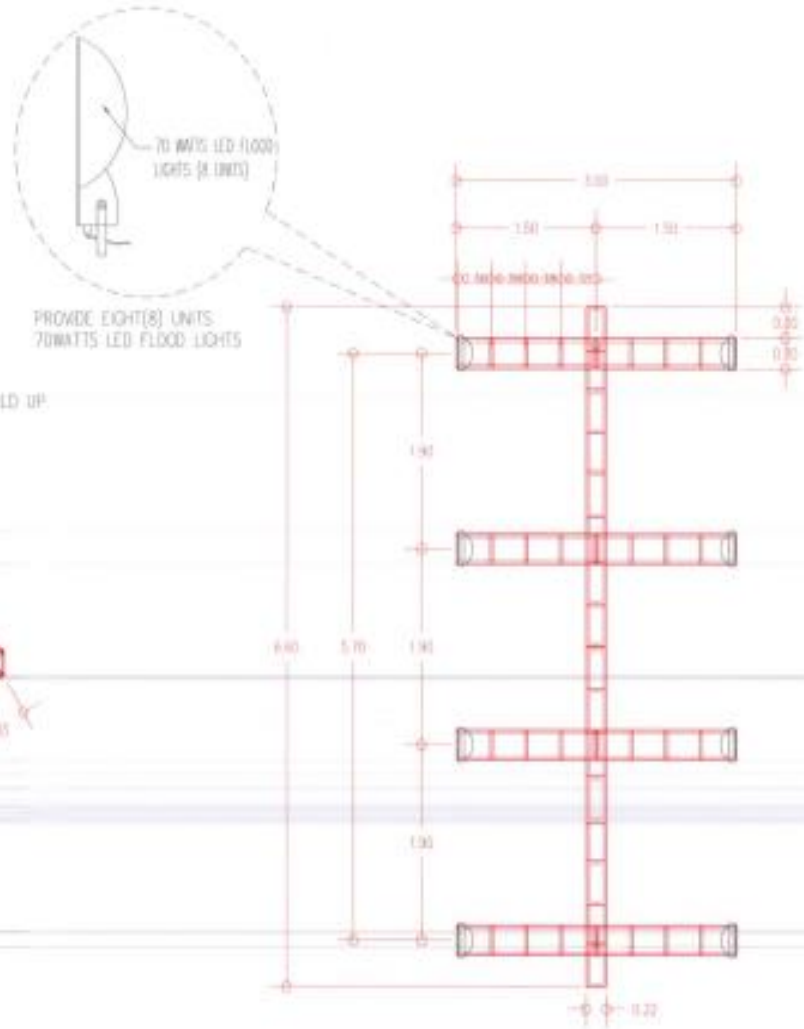

GATE SIGNAGE PLAN
SCALE 1:60

PHILIPPINE PORTS AUTHORITY
PMO ZAMBOANGA DEL NORTE

PROJECT TITLE:
EMERGENCY REPAIR OF RC DECK, PILE CAP, RIPRAP, GUARDHOUSE AND REPAIR/REPLACEMENT OF DAMAGED V-TYPE RDF AND USED TRUCK TIRES
PORT OF LAMAO, LILOY, ZAMBOANGA DEL NORTE

PREPARED BY:	CHECKED BY:	REVIEWED BY:	RECOMMENDING APPROVAL:	APPROVED BY:
ABDUL RAFFY H. PADDAM ELECTRICIAN FOREMAN	ENGR. BRYAN E. BALLON SENIOR ENGINEER - A	ENGR. DIOSDADO U. ARANAYDO PRINCIPAL ENGINEER A	ENGR. ABDURASAD S. HASAN FSD MANAGER	ENGR. SALVADOR L. DELINA PMO MANAGER

SHEET CONTENTS:
- GATE SIGNAGE PLAN AND ITS FRAMING

SHEET NO.: 13 OF 22

DATE: OCT. 8, 2020

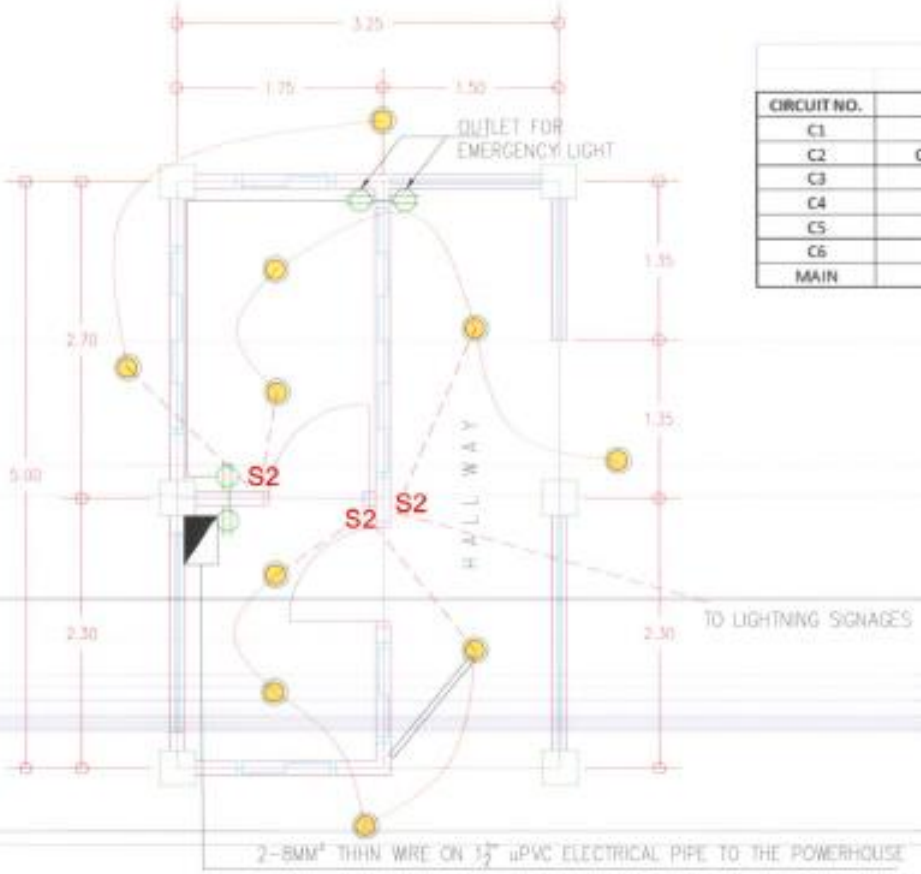

SCHEDULE OF LOADS-GUARD HOUSE

CIRCUIT NO.	DESCRIPTION	QUANTITY	VOLTAGE	WATTAGE	AMPERAGE	CKT NO.	SIZE OF WIRE
C1	LIGHTING OUTLET	10	220	1000	4.545	20A	3.50 MM² THHN WIRE
C2	CONVENIENCE OUTLET	4	220	800	3.636	20A	3.50 MM² THHN WIRE
C3	Signage Lightings	8	220	800	3.636	20A	3.50 MM² THHN WIRE
C4	SPARE 1	1	220			30A	
C5	SPARE 2	1	220			30A	
C6	SPARE 2	1	220			20A	
MAIN					11.818	40A	8.00MM² THW WIRE

LEGEND:

- 12WATTS LED BULB
- S2 SWITCH
- PANEL BOARD

ELECTRICAL PLAN

SCALE 1: 40

PHILIPPINE PORTS AUTHORITY
PMO ZAMBOANGA DEL NORTE

PROJECT TITLE:

EMERGENCY REPAIR OF RC DECK, PILE CAP, RIPRAP, GUARDHOUSE AND REPAIR/REPLACEMENT OF DAMAGED V-TYPE RDF AND USED TRUCK TIRES

PORT OF LAMAO, LILOY, ZAMBOANGA DEL NORTE

PREPARED BY:	CHECKED BY:	REVIEWED BY:	RECOMMENDING APPROVAL:	APPROVED BY:
ABDUL RAFFY H. PADOAN ELECTRICIAN FOREMAN	ENGR. BRYAN E. BALLON SENIOR ENGINEER I	ENGR. DIOSDADO U. ARANAYDO PRINCIPAL ENGINEER A	ENGR. ABDURASAD S. HASAN HEAD MANAGER	ENGR. SALVADOR L. DELINA PORT MANAGER

SHEET CONTENTS:
- ELECTRICAL PLAN
- SCHEDULE OF LOADS

SHEET NO.: 14 OF 22

DATE: OCT. 8, 2020

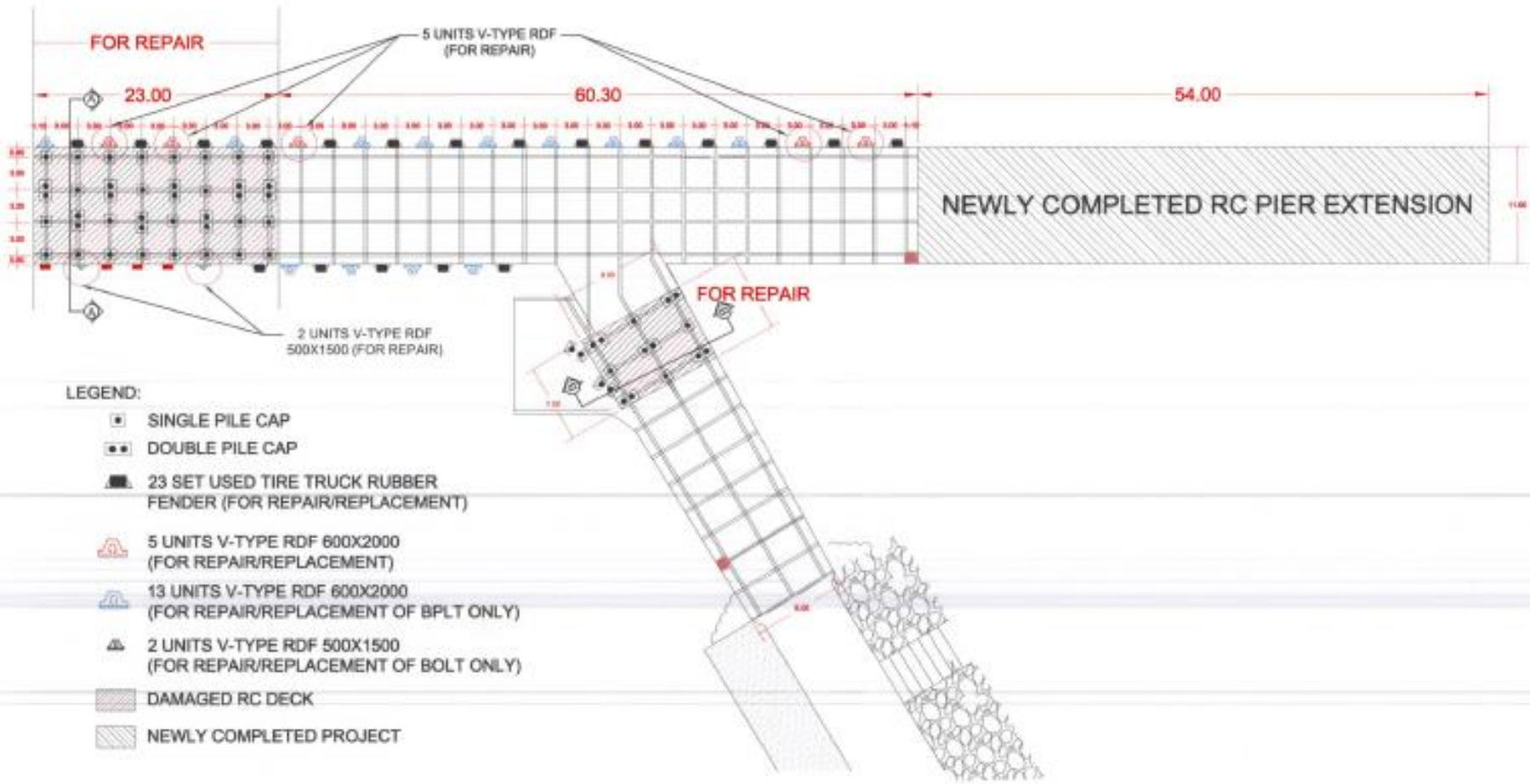

PLAN SHOWING DAMAGE RC DECK, SINGLE & DOUBLE PILE CAP (GENERAL PLAN 'B')
SCALE 1:50

PHILIPPINE PORTS AUTHORITY
PMO ZAMBOANGA DEL NORTE

PROJECT TITLE:
EMERGENCY REPAIR OF RC DECK, PILE CAP, RIPRAP, GUARDHOUSE AND REPAIR/REPLACEMENT OF DAMAGED V-TYPE RDF AND USED TRUCK TIRES
PORT OF LAMAO, LILOY, ZAMBOANGA DEL NORTE

PREPARED BY:	CHECKED BY:	REVIEWED BY:	RECOMMENDING APPROVAL:	APPROVED BY:
ABDUL RAFFY H. PADDAM ELECTRICIAN FOREMAN	ENGR. BRYAN E. BALLON SENIOR ENGINEER - A	ENGR. DIOSDADO U. ARANAYDO PRINCIPAL ENGINEER A	ENGR. ABDURASAD S. HASAN OSM MANAGER	ENGR. SALVADOR L. DELINA PORT MANAGER

SHEET CONTENTS: • GENERAL PLAN-'B'

SHEET NO.: 15 OF 22

DATE: OCT. 8, 2020

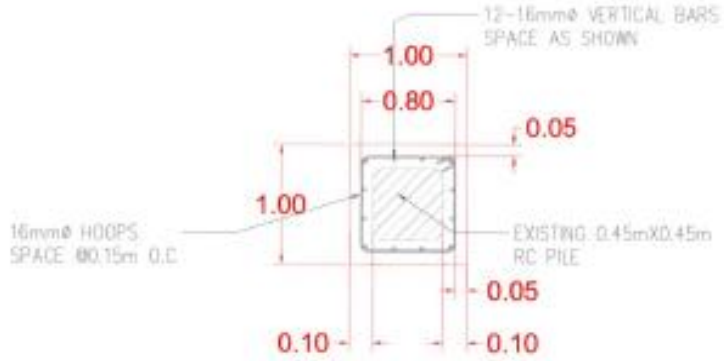

SINGLE PILE PLAN
SCALE: 1:20

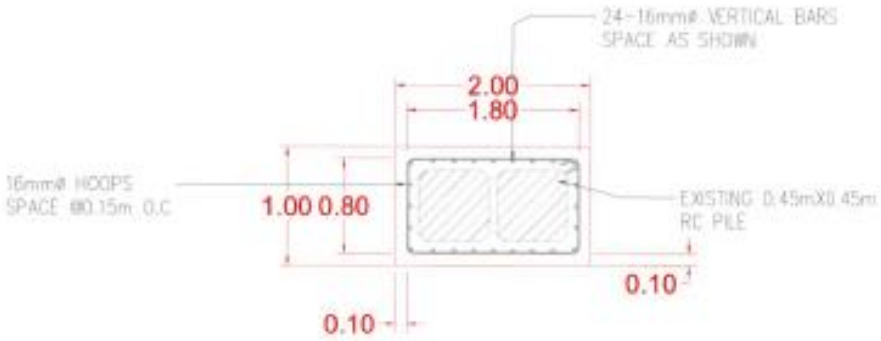

DOUBLE PILE PLAN
SCALE: 1:20

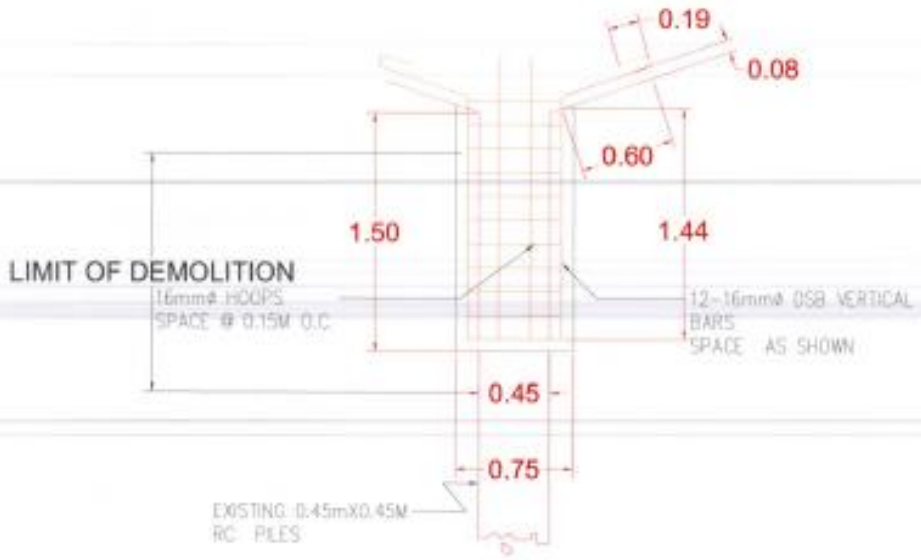

ELEV. OF SINGLE PILE
SCALE: 1:20

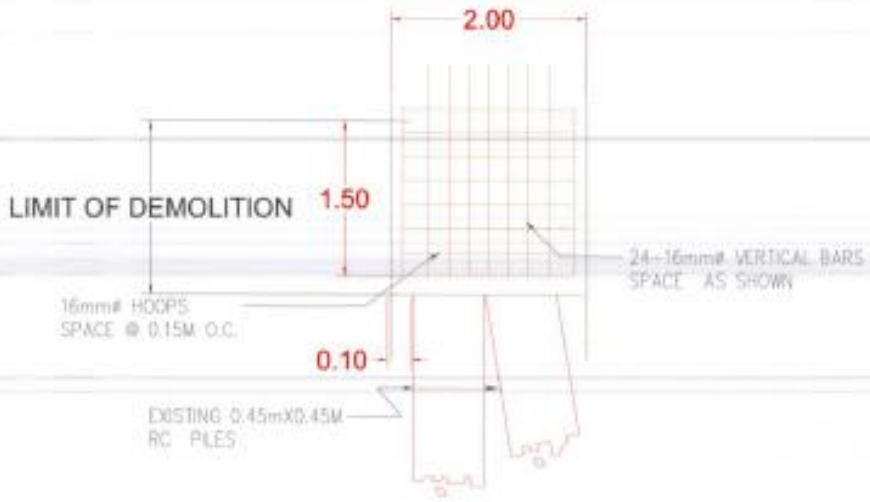

ELEV. OF DOUBLE PILE
SCALE: 1:20

PHILIPPINE PORTS AUTHORITY
PMO ZAMBOANGA DEL NORTE

PROJECT TITLE:

EMERGENCY REPAIR OF RC DECK, PILE CAP, RIPRAP, GUARDHOUSE AND REPAIR/REPLACEMENT OF DAMAGED V-TYPE RDF AND USED TRUCK TIRES

PORT OF LAMAO, LILOY, ZAMBOANGA DEL NORTE

PREPARED BY:	CHECKED BY:	REVIEWED BY:	RECOMMENDING APPROVAL:	APPROVED BY:
ABDUL RAFFY H. PADDAM ELECTRICIAN FOREMAN	ENGR. BRYAN E. BALLON SENIOR ENGINEER - A	ENGR. DIOSDADO U. ARANAYDO PRINCIPAL ENGINEER A	ENGR. ABDUBASAD S. HASAN OSD MANAGER	ENGR. SALVADOR L. DELENA PORT MANAGER

SHEET CONTENTS:
- SINGLE AND DOUBLE PILE CAP DETAILS

SHEET NO.: 16 OF 22

DATE: OCT. 8, 2020

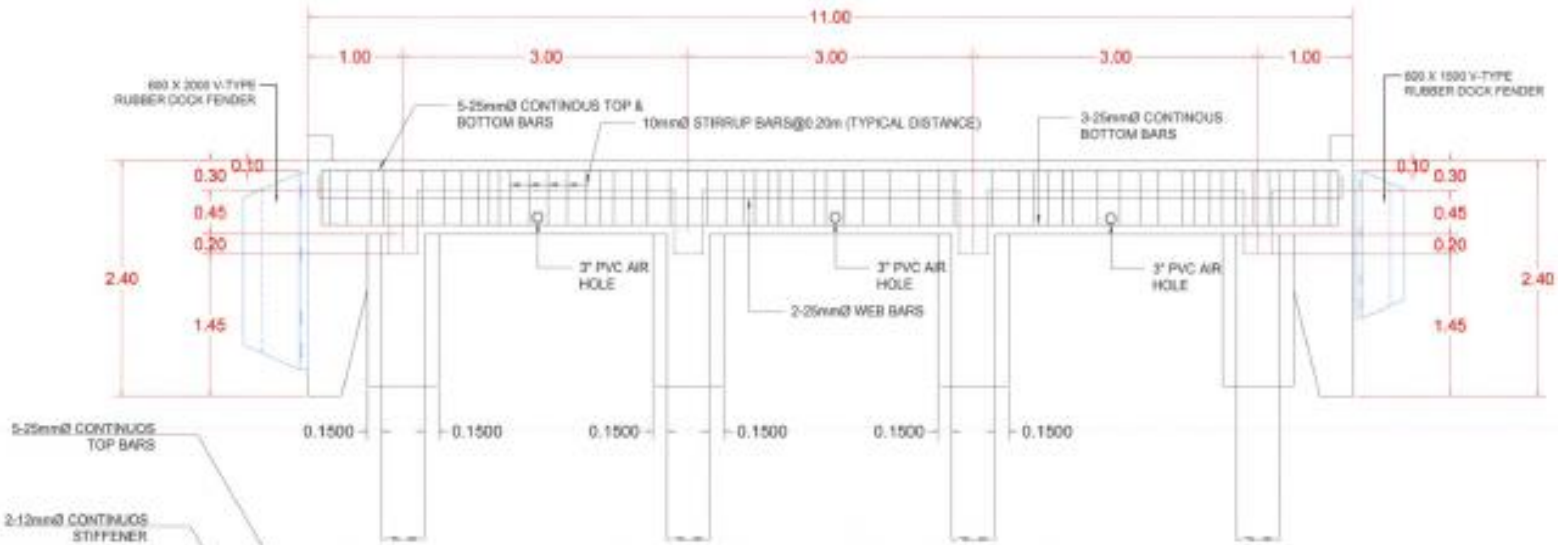

TYPICAL RC

SCALE: 1:20

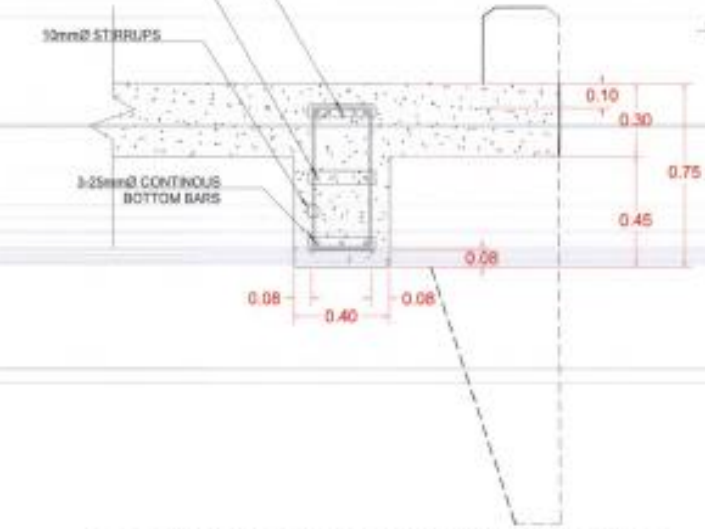

TYPICAL SEC. OF CANTILEVER BEAM

SCALE: 1:20

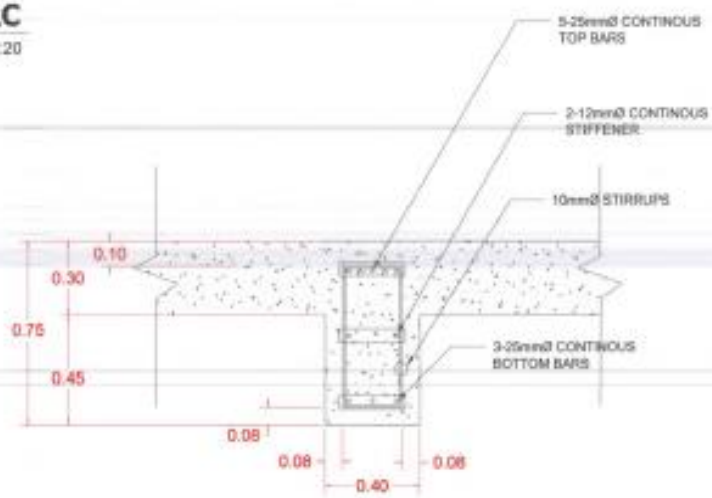

@ INTTERIOR SUPPORT & MID-SPAN

TYPICAL SEC. OF BEAM

SCALE: 1:20

PHILIPPINE PORTS AUTHORITY
PMO ZAMBOANGA DEL NORTE

PROJECT TITLE:

EMERGENCY REPAIR OF RC DECK, PILE CAP, RIPRAP, GUARDHOUSE AND REPAIR/REPLACEMENT OF DAMAGED V-TYPE RDF AND USED TRUCK TIRES

PORT OF LAMAO, LILOY, ZAMBOANGA DEL NORTE

PREPARED BY:	CHECKED BY:	REVIEWED BY:	RECOMMENDING APPROVAL:	APPROVED BY:
ABDUL RAFFY H. PADDAM ELECTRICIAN FOREMAN	ENGR. BRYAN E. BALLON SENIOR ENGINEER - A	ENGR. DIOSDADO U. ARANAYDO PRINCIPAL ENGINEER A	ENGR. ABDURASAD S. HASAN MIS MANAGER	ENGR. SALVADOR L. DELINA PORT MANAGER

SHEET CONTENTS:
- RC DECK DET.
- TYP. SECTION OF BEAM AND CANTILEVER

SHEET NO.: 17 OF 22

DATE: OCT. 8, 2020

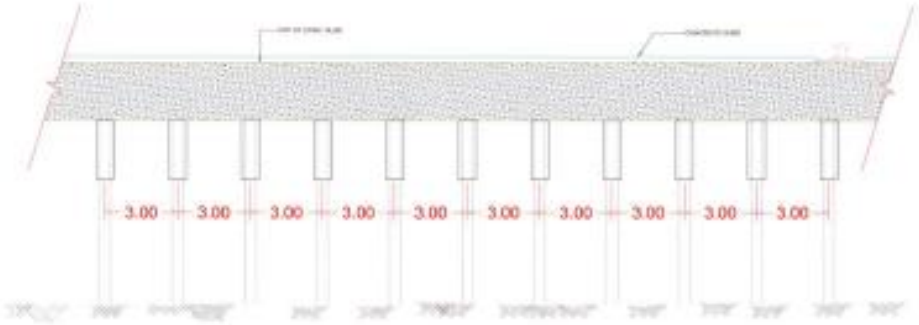

TYP. SIDE ELEVATION
SCALE: 1:200

FRONT ELEV. (SEC. A-A)
SCALE: 1:100

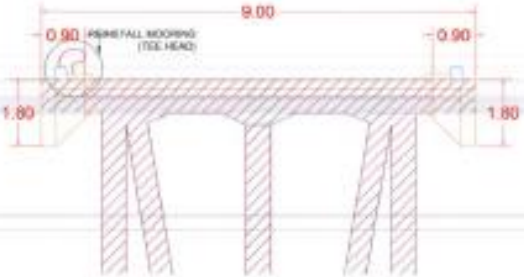

FRONT ELEV. (SEC. B-B)
SCALE: 1:50

TYP. SECTION OF RC DECK
SCALE: 1:200

PHILIPPINE PORTS AUTHORITY
PMO ZAMBOANGA DEL NORTE

PROJECT TITLE:

EMERGENCY REPAIR OF RC DECK, PILE CAP, RIPRAP, GUARDHOUSE AND REPAIR/REPLACEMENT OF DAMAGED V-TYPE RDF AND USED TRUCK TIRES

PORT OF LAMAO, LILOY, ZAMBOANGA DEL NORTE

PREPARED BY:	CHECKED BY:	REVIEWED BY:	RECOMMENDING APPROVAL:	APPROVED BY:
ABDUL RAFFY B. PADDAM ELECTRICIAN FOREMAN	ENGR. BRYAN B. BALLON SENIOR ENGINEER - A	ENGR. DIOSDADO U. ARANAYDO PRINCIPAL ENGINEER A	ENGR. ABDURASAD S. HASAN ISD MANAGER	ENGR. SALVADOR L. DELINA PORT MANAGER

SHEET CONTENTS:	SHEET NO.:
• ELEVATION AND SECTIONS OF RC DECK	18 OF 22

DATE: OCT. 8, 2020

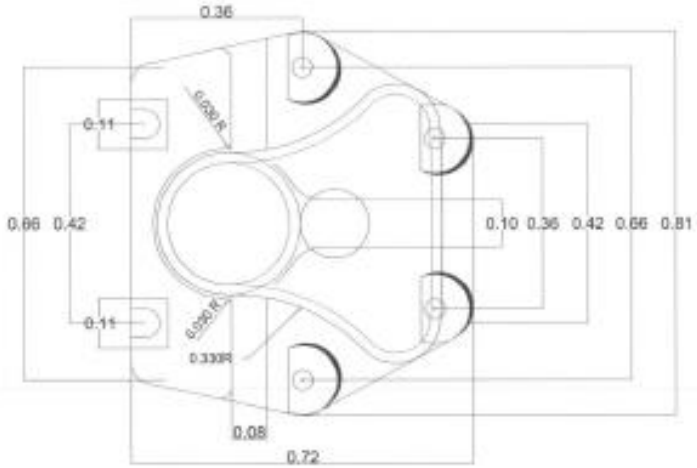

MATERIALS AND WEIGHT

NO.	DESCRIPTION	MATERIALS AND SPECIFICATION	ALLOWABLE STRESS (Kgf / Cm	QTY.	WEIGHT PER Pc. (Kgf)	WT. (Kgf)
1	BODY	JIS G 5101 3 GRADE SC 46	1.400	1	440	440
2	ANCHOR BOLT	JIS G 3101 2 GRADE SS 41 JIS B 5205 M 42 - 4.5	1.400	6	9	54
3	HEXAGON NUTS	JIS B 1181 1 GRADE 4T, M 42 - 4.5	—	12	—	—
4	PLAIN WASHER	JIS B 1256, ROUND STEEL	—	6	—	—
5	ANCHOR RING	JIS G 3101 2 GRADE SS 41 OR JIS G 5101 3 GRADE SC 46	1.400	6	6	46

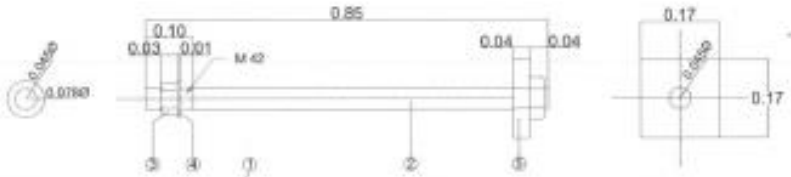

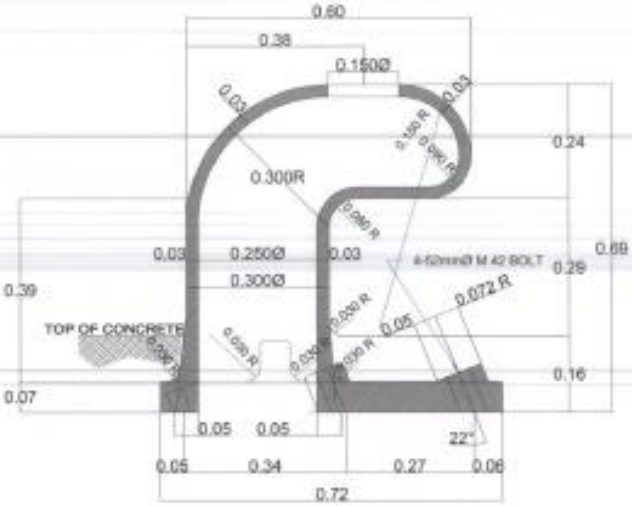

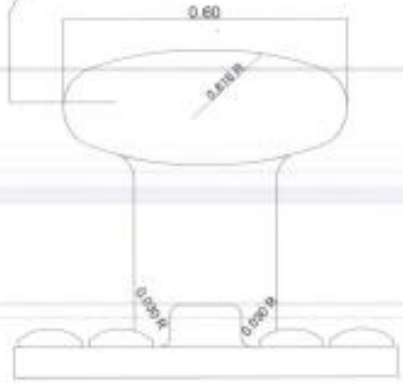

35 TONS MOORING BOLLARD DETAILS.

SCALE: 1:10

PHILIPPINE PORTS AUTHORITY
PMO ZAMBOANGA DEL NORTE

PROJECT TITLE:

EMERGENCY REPAIR OF RC DECK, PILE CAP, RIPRAP, GUARDHOUSE AND REPAIR/REPLACEMENT OF DAMAGED V-TYPE RDF AND USED TRUCK TIRES

PORT OF LAMAG, LILOY, ZAMBOANGA DEL NORTE

PREPARED BY:	CHECKED BY:	REVIEWED BY:	RECOMMENDING APPROVAL:	APPROVED BY:
ABDUL RAFFY H. PADDAM ELECTRICIAN FOREMAN	ENGR. BRYAN [illegible] SENIOR ENGINEER - A	ENGR. DIOSDADO U. ARANAYDO PRINCIPAL ENGINEER A	ENGR. ABDURASAD S. HASAN SBO MANAGER	ENGR. SALVADOR L. DELINA PORT MANAGER

SHEET CONTENTS: • MOORING BOLLARD DET.

SHEET NO.: 19 OF 22

DATE: OCT. 5, 2020

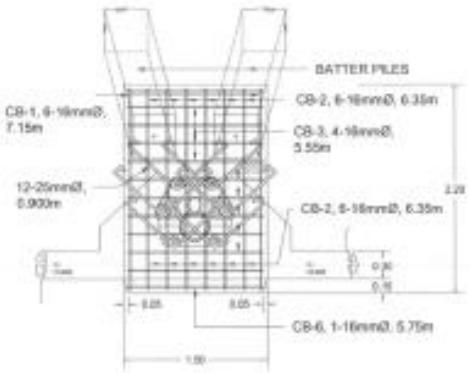

PLAN
SCALE: 1:50

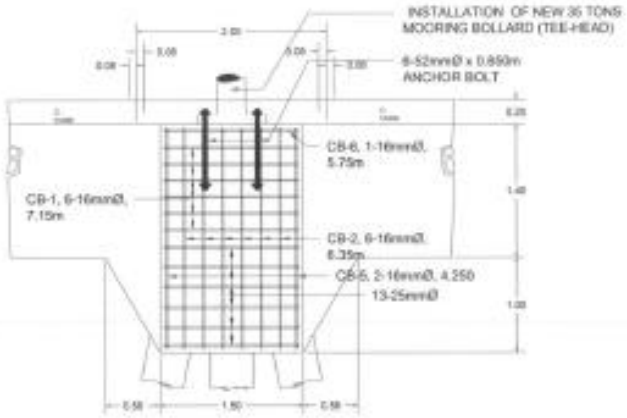

FRONT ELEVATION
SCALE: 1:50

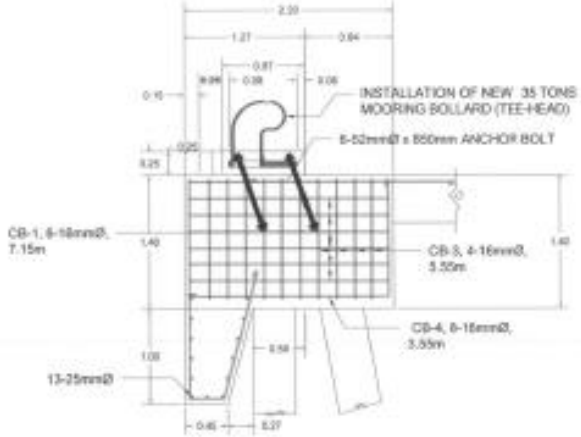

SIDE ELEVATION
SCALE: 1:50

CB-1, 6-16ø X 7.15M
SCALE: 1:50

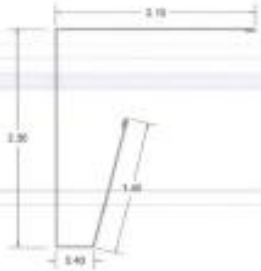

CB-2, 6-16ø X 6.35M
SCALE: 1:50

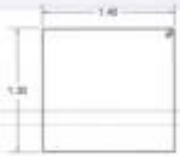

CB-3, 4-16ø X 5.55M
SCALE: 1:50

BAR CB-4, 8-16mmø x 3.55M
SCALE: 1:50

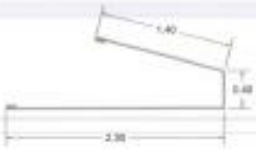

BAR CB-5, 2-16mmø x 4.25M
SCALE: 1:50

BAR CB-6, 1-16mmø x 5.75M
SCALE: 1:50

PHILIPPINE PORTS AUTHORITY
PMO ZAMBOANGA DEL NORTE

PROJECT TITLE:

EMERGENCY REPAIR OF RC DECK, PILE CAP, RIPRAP, GUARDHOUSE AND REPAIR/REPLACEMENT OF DAMAGED V-TYPE RDF AND USED TRUCK TIRES

PORT OF LAMAO, LILOY, ZAMBOANGA DEL NORTE

PREPARED BY:	CHECKED BY:	REVIEWED BY:	RECOMMENDING APPROVAL:	APPROVED BY:
ABDUL RAFFY R. PADDAM ELECTRICIAN FOREMAN	ENGR. BRYAN E. BALLON SENIOR ENGINEER - II	ENGR. DIOSDADO U. ARANAYDO PRINCIPAL ENGINEER II	ENGR. ABDURASAD S. HASAN ISD MANAGER	ENGR. SALVADOR L. DELINA PORT MANAGER

SHEET CONTENTS: • AS SHOWN

SHEET NO.: 20 OF 22

DATE: OCT. 6, 2020

PERFORMANCE CHARACTERISTIC OF 500 H (V-Type)

AT RATED DEFLECTION OF FENDER (45%)		
HULL PRESSURE	REACTION FORCE	ENERGY ABSORPTION
TON / M	TON	TON / M
90.0	122.0	21.2

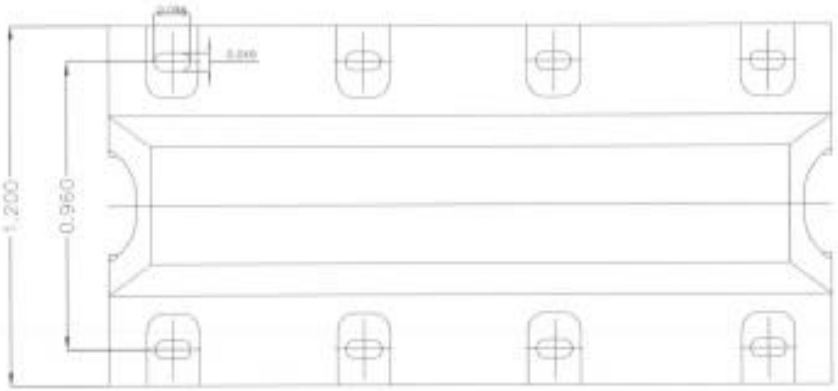

PLAN

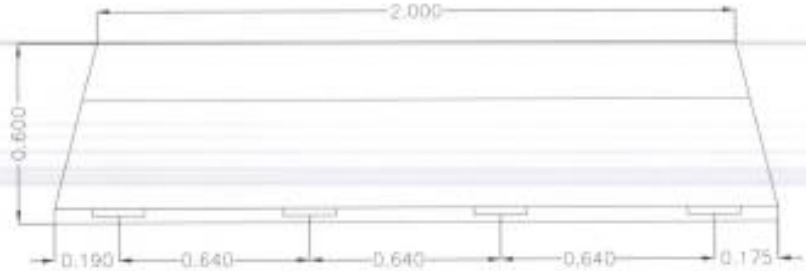

ELEVATION

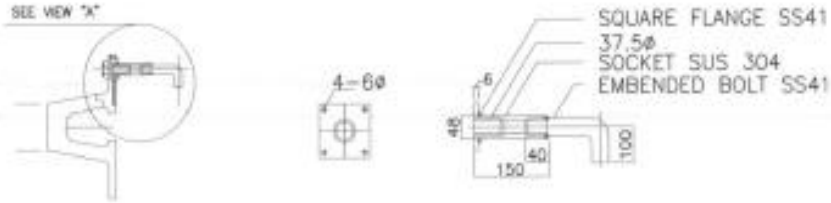

SIDE ELEVATION

VIEW "A"

FIXING BOLT (SS41)
(Zn COATING)

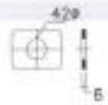

WASHER (SS41)
(Zn COATING)

DET. OF RDF (V-500H)
SCALE: 1:20

DET. OF ANCHOR BOLT (NORMAL)
SCALE: NTS

PHILIPPINE PORTS AUTHORITY
PMO ZAMBOANGA DEL NORTE

PROJECT TITLE:
EMERGENCY REPAIR OF RC DECK, PILE CAP, RIPRAP, GUARDHOUSE AND REPAIR/REPLACEMENT OF DAMAGED V-TYPE RDF AND USED TRUCK TIRES
PORT OF LAMAO, LILOY, ZAMBOANGA DEL NORTE

PREPARED BY:	CHECKED BY:	REVIEWED BY:	RECOMMENDING APPROVAL:	APPROVED BY:
ABDUL RAFFY H. PADDAM ELECTRICIAN FOREMAN	ENGR. BRYAN E. BALLON SENIOR ENGINEER - A	ENGR. DIOSDADO U. ARANAYDO PRINCIPAL ENGINEER A	ENGR. ABDUKASAD S. HASAN ESC MANAGER	ENGR. SALVADOR L. DELINA PORT MANAGER

SHEET CONTENTS:
- DET. OF V-TYPE RDF AND ANCHOR BOLTS DETAILS

SHEET NO.: 21 OF 22

DATE: OCT. 8, 2020

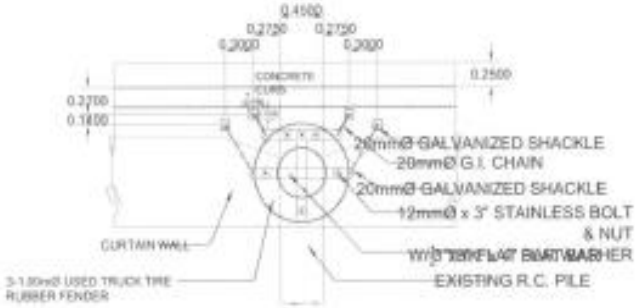

FOR REPLACEMENT
FRONT ELEVATION PLAN
SCALE:50mts

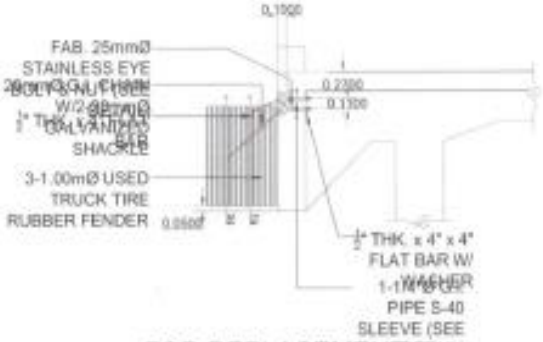

FOR REPLACEMENT
SIDE ELEVATION PLAN
SCALE:50mts

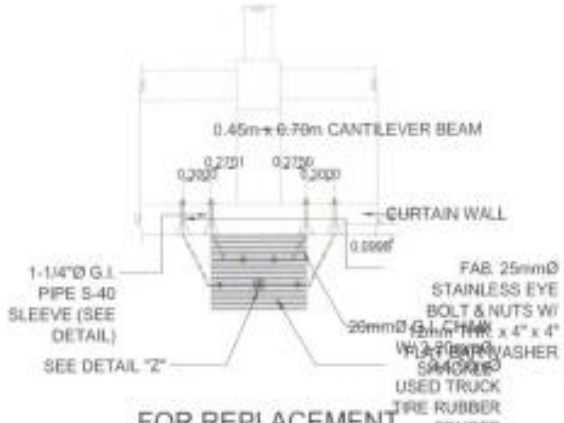

FOR REPLACEMENT
TOP VIEW
SCALE:50mts

FOR REPLACEMENT
DETAIL OF "Z"
SCALE:50mts

SECTION

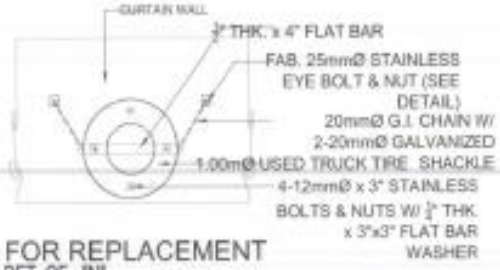

FOR REPLACEMENT
DET. OF - "N"
SCALE:50mts

FOR REPLACEMENT
FAB. OF 25mmØ STAINLESS EYE BOLT & NUT
SCALE:5mts

ELEVATION

FOR REPLACEMENT
DET. OF SLEEVE
SCALE:5mts

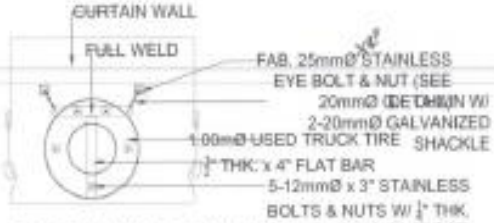

FOR REPLACEMENT
DET. OF - "O"
SCALE:50mts

PHILIPPINE PORTS AUTHORITY
PMO ZAMBOANGA DEL NORTE

PROJECT TITLE:

EMERGENCY REPAIR OF RC DECK, PILE CAP, RIPRAP, GUARDHOUSE AND REPAIR/REPLACEMENT OF DAMAGED V-TYPE RDF AND USED TRUCK TIRES

PORT OF LAMAO, LILOY, ZAMBOANGA DEL NORTE

PREPARED BY:	CHECKED BY:	REVIEWED BY:	RECOMMENDING APPROVAL:	APPROVED BY:
ABDUL RABBY H. PADDAM ELECTRICIAN FOREMAN	ENGR. BRYAN E. BALLON SENIOR ENGINEER - B	ENGR. DIOSDADO U. ARANAYDO PRINCIPAL ENGINEER A	ENGR. ABDURASAD S. HASAN ESD MANAGER	ENGR. SALVADOR L. DELINA DIST MANAGER

SHEET CONTENTS:
- DETAILS OF USED TIRE TRUCKS AND ITS ATTACHMENT DETAILS

SHEET NO.: 22 OF 22

DATE: OCT. 6, 2020

Section VIII. Bill of Quantities

BILL OF QUANTITIES

Name of Project: ***Emergency Repair of RC Deck, Pile Cap, Riprap, Guardhouse and Repair/Replacement of Damaged V-Type RDF and Used Truck Tires***

Location: Port of Lamao, Liloy, Zamboanga Del Norte
Name of Bidder:_____

Item No.	Description	Unit	Quantity	Unit Cost	Amount
1.0	Supply of labor, materials, and equipment for the **Mobilization & Demobilization** at Pesos _____ _____ _____ _____ _____ _____ _____per lot	lot	1		
2.00 2.10	**REPAIR OF RC DECK** Supply of labor, materials, and equipment for the **Falsework for Demolition of RC Deck** at Pesos _____ _____ _____ _____ _____ _____ _____per sq.m	Sq.m	320.50		

_____
Signature of Bidder's Authorized Representative

2.20	Supply of labor, materials, and equipment for the **Demolition Works for the Damaged RC Deck and Curb** at Pesos _____ _____ _____ _____ _____ _____per cu.m	Cu.m	304.00		
2.30	Supply of labor, materials, and equipment for the **Rebar Works for RC Deck** at Pesos _____ _____ _____ _____ _____ _____per kg	kg	37,068.00		
2.40	Supply of labor, materials, and equipment for the **Re-installation of 4 Units 35T Mooring Bollard** at Pesos _____ _____ _____ _____ _____ _____per unit	units	4		

_____

Signature of Bidder's Authorized Representative

2.50	Supply of labor, materials, and equipment for the **Supply and Place Concrete (4000-4500 PSI)** at Pesos _____ _____ _____ _____ _____ _____per cu.m	Cu.m	324.00		
3.00 3.10	**REPAIR/REPLACEMENT OF DAMAGED V-TYPE RDF AND USED TRUCK TIRES** Supply of labor, materials, and equipment for the **Supply, Deliver and Install Steel Hanging Platform** at Pesos _____ _____ _____ _____ _____ _____per unit	units	4		
3.20	Supply of labor, materials, and equipment for the **Removal of Damaged V-Type RDF and Used Truck Tire Fenders** at Pesos _____ _____ _____ _____	units	43		

Signature of Bidder's Authorized Representative

3.30	_____per unit Supply of labor, materials, and equipment for the **Concrete Boring, Placement of RDF & Truck Tire Bolts and Restoration of Damaged Concrete** at Pesos _____ _____ _____ _____ _____ _____per hole	holes	168		
3.40	Supply of labor, materials, and equipment for **the Supply and Delivery of V-Type RDF** at Pesos _____ _____ _____ _____ _____ _____per unit	units	5		

_____

Signature of Bidder's Authorized Representative

3.50	Supply of labor, materials, and equipment for the **Supply and Delivery of Truck Tire Fenders** at Pesos _____ _____ _____ _____per unit	Units	23		
3.60	Supply of labor, materials, and equipment for the **Installation of V-Type RDF and Truck Tire Fenders** at Pesos _____ _____ _____ _____ _____ _____per unit	units	43		
4.00 4.10	**REPAIR OF BULKHEAD AND RIPRAP** Supply of labor, materials, and equipment for the **Supply, Deliver and Placement of Rocks with Grout** at Pesos _____ _____ _____ _____ _____ _____per cu.m	Cu.m	1,683.00		

_____
Signature of Bidder's Authorized Representative

4.20	Supply of labor, materials, and equipment for the **Supply and install reinforcing steel bars for concrete toppings** at Pesos _____ _____ _____ _____ _____ _____per kg	kg	12,952.00		
4.30	Supply of labor, materials, and equipment for the **Supply and Place Concrete Toppings (4000-4500 PSI)** at Pesos _____ _____ _____ _____ _____ _____per cu.m	Cu.m	235		
4.40	Supply of labor, materials, and equipment for the **Backfilling and Compaction** at Pesos _____ _____ _____ _____ _____ _____per cu.m	Cu.m	714.00		

_____
Signature of Bidder's Authorized Representative

4.50	Supply of labor, materials, and equipment for the **Demolition of CHB Fence, Affected Pavement & Disposal of Surplus** at Pesos _____ _____ _____ _____ _____ _____per cu.m	Cu.m	14		
4.60	Supply of labor, materials, and equipment for the **Excavation Works for CHB Fence** at Pesos _____ _____ _____ _____ _____ _____per cu.m	Cu.m	20		
4.70	Supply of labor, materials, and equipment for the **Rebar Works for the Reconstruction of CHB Fence** at Pesos _____ _____ _____ _____ _____ _____per kg	kg	443.00		

_____
Signature of Bidder's Authorized Representative

4.80	Supply of labor, materials, and equipment for the **Concreting Works for the CHB Fence** at Pesos _____ _____ _____ _____ _____ _____per cu.m	Cu.m	5.00		
4.90	Supply of labor, materials, and equipment for **the Masonry Works for the CHB Fence** at Pesos _____ _____ _____ _____ _____ _____per sq.m	Sq.m	26.00		
4.91	Supply of labor, materials, and equipment for the **Supply, Delivery & Installation of Barbed Wires** at Pesos _____ _____ _____ _____ _____ _____per roll	roll	1		

Signature of Bidder's Authorized Representative

4.92	Supply of labor, materials, and equipment for the **Painting Works for the CHB Fence** at Pesos _____ _____ _____ _____ _____per sq.m	Sq.m	58.00		
5.00	**REPAIR OF GATE AND PORT SIGNAGE**				
5.10	Supply of labor, materials, and equipment for the **Stainless Steel Works for the Gate** at Pesos _____ _____ _____ _____ _____ _____per sq.m	Sq.m	14.90		

_____

Signature of Bidder's Authorized Representative

5.20	Supply of labor, materials, and equipment for the **Repair of Signage with Lightings** at Pesos _____ _____ _____ _____ _____ _____per sq.m	Sq.m	10.62		
6.00 6.10	**REPAIR OF GUARD HOUSE** Supply of labor, materials, and equipment for the **Demolition of Guard House** at Pesos _____ _____ _____ _____ _____ _____per sq.m	Sq.m	16.25		
6.20	Supply of labor, materials, and equipment for the **Excavation Works** at Pesos _____ _____ _____ _____ _____ _____per cu.m	Cu.m	10.80		

Signature of Bidder's Authorized Representative

6.30	Supply of labor, materials, and equipment for the **Rebar Works** at Pesos _____ _____ _____ _____ _____ _____per kg	kg	2,167.00		
6.40	Supply of labor, materials, and equipment for the **Concreting Works** at Pesos _____ _____ _____ _____ _____ _____per cu.m	Cu.m	16.00		
6.50	Supply of labor, materials, and equipment for the **Backfilling Works** at Pesos _____ _____ _____ _____ _____ _____per cu.m	Cu.m	40		

_____

Signature of Bidder's Authorized Representative

6.60	Supply of labor, materials, and equipment for the **Waterproofing Works** at Pesos _____ _____ _____ _____ _____ _____per sq.m	Sq.m	41.00		
6.70	Supply of labor, materials, and equipment for the **Installation of PVC Downspout** at Pesos _____ _____ _____ _____ _____ _____per Ln.m	Ln.m	48.00		
6.80	Supply of labor, materials, and equipment for the **Masonry Works** at Pesos _____ _____ _____ _____ _____ _____per sq.m	Sq.m	70.00		

_____

Signature of Bidder's Authorized Representative

6.90	Supply of labor, materials, and equipment for the **Steel Works** at Pesos _____ _____ _____ _____ _____ _____per kg	kg	223.97		
6.91	Supply of labor, materials, and equipment for the **Painting Works** at Pesos _____ _____ _____ _____ _____ _____per sq.m	Sq.m	140.00		
6.92	Supply of labor, materials, and equipment for the **Electrical Works** at Pesos _____ _____ _____ _____ _____ _____ per lot	lot	1		

_____

Signature of Bidder's Authorized Representative

6.93	Supply of labor, materials, and equipment for the **Glass Works** at Pesos _____ _____ _____ _____ _____ _____ per sq.m	Sq.m	7.80		
6.94	Supply of labor, materials, and equipment for the **Carpentry Works** at Pesos _____ _____ _____ _____ _____ _____ per set	Set	1		
7.00	Supply of labor, materials, and equipment for the **Construction Safety and Health Program** at Pesos _____ _____ _____ _____ _____ _____ per lot	lot	1		

Signature of Bidder's Authorized Representative

	GRAND TOTAL COST OF BID
	Total Amount of Bid Inclusive of VAT (in Figures)_____ **Total Amount of Bid Inclusive of VAT (In Words) _____** Submitted by: Name and Signature of Bidder_____ Date of Bidding: _____

_____

Signature of Bidder's Authorized Representative

Section IX. Checklist of Technical and Financial Documents

Checklist of Technical and Financial Documents

I. TECHNICAL COMPONENT ENVELOPE

Class "A" Documents

Legal Documents

- (a) Valid PhilGEPS Registration Certificate (Platinum Membership) (all pages);

  or

- (b) Registration certificate from Securities and Exchange Commission (SEC), Department of Trade and Industry (DTI) for sole proprietorship, or Cooperative Development Authority (CDA) for cooperatives or its equivalent document;

  and

- (c) Mayor's or Business permit issued by the city or municipality where the principal place of business of the prospective bidder is located, or the equivalent document for Exclusive Economic Zones or Areas;

  and

- (e) Tax clearance per E.O. No. 398, s. 2005, as finally reviewed and approved by the Bureau of Internal Revenue (BIR).

Technical Documents

- (f) Statement of the prospective bidder of all its ongoing government and private contracts, including contracts awarded but not yet started, if any, whether similar or not similar in nature and complexity to the contract to be bid; **and**
- (g) Statement of the bidder's Single Largest Completed Contract (SLCC) similar to the contract to be bid, except under conditions provided under the rules; **and**
- (h) Philippine Contractors Accreditation Board (PCAB) License;

  or

  Special PCAB License in case of Joint Ventures;

  and registration for the type and cost of the contract to be bid; **and**
- (i) Original copy of Bid Security. If in the form of a Surety Bond, submit also a certification issued by the Insurance Commission;

  or

  Original copy of Notarized Bid Securing Declaration; **and**

  (j) Project Requirements, which shall include the following:

  - a. Organizational chart for the contract to be bid;
  - b. List of contractor's key personnel (*e.g.*, Project Manager, Project Engineers, Materials Engineers, and Foremen), to be assigned to the contract to be bid, with their complete qualification and experience data;
  - c. List of contractor's major equipment units, which are owned, leased, and/or under purchase agreements, supported by proof of ownership or certification of availability of equipment from the equipment lessor/vendor for the duration of the project, as the case may be; **and**
- (k) Original duly signed Omnibus Sworn Statement (OSS);

and if applicable, Original Notarized Secretary's Certificate in case of a corporation, partnership, or cooperative; or Original Special Power of Attorney of all members of the joint venture giving full power and authority to its officer to sign the OSS and do acts to represent the Bidder.

Financial Documents

- (l) The prospective bidder's audited financial statements, showing, among others, the prospective bidder's total and current assets and liabilities, stamped "received" by the BIR or its duly accredited and authorized institutions, for the preceding calendar year which should not be earlier than two (2) years from the date of bid submission; **and**
- (m) The prospective bidder's computation of Net Financial Contracting Capacity (NFCC).

Class "B" Documents

- (n) If applicable, duly signed joint venture agreement (JVA) in accordance with RA No. 4566 and its IRR in case the joint venture is already in existence;
  or
  duly notarized statements from all the potential joint venture partners stating that they will enter into and abide by the provisions of the JVA in the instance that the bid is successful.

II. FINANCIAL COMPONENT ENVELOPE

- (o) Original of duly signed and accomplished Financial Bid Form; **and**

Other documentary requirements under RA No. 9184

- (p) Original of duly signed Bid Prices in the Bill of Quantities; **and**
- (q) Duly accomplished Detailed Estimates Form, including a summary sheet indicating the unit prices of construction materials, labor rates, and equipmen rentals used in coming up with the Bid; **and**
- (r) Cash Flow by Quarter.

Section X. Bidding Forms

Bid Form for the Procurement of Infrastructure Projects

[shall be submitted with the Bid]

BID FORM

Date : _____

Project Identification No. : _____

To: [name and address of Procuring Entity]

Having examined the Philippine Bidding Documents (PBDs) including the Supplemental or Bid Bulletin Numbers *[insert numbers]*, the receipt of which is hereby duly acknowledged, we, the undersigned, declare that:

a. We have no reservation to the PBDs, including the Supplemental or Bid Bulletins, for the Procurement Project: *[insert name of contract];*

b. We offer to execute the Works for this Contract in accordance with the PBDs;

c. The total price of our Bid in words and figures, excluding any discounts offered below is: *[insert information]*;

d. The discounts offered and the methodology for their application are: *[insert information]*;

e. The total bid price includes the cost of all taxes, such as, but not limited to: *[specify the applicable taxes, e.g. (i) value added tax (VAT), (ii) income tax, (iii) local taxes, and (iv) other fiscal levies and duties]*, which are itemized herein and reflected in the detailed estimates,

f. Our Bid shall be valid within the a period stated in the PBDs, and it shall remain binding upon us at any time before the expiration of that period;

g. If our Bid is accepted, we commit to obtain a Performance Security in the amount

of *[insert percentage amount]* percent of the Contract Price for the due performance of the Contract, or a Performance Securing Declaration in lieu of the the allowable forms of Performance Security, subject to the terms and conditions of issued GPPB guidelines[1] for this purpose;

h. We are not participating, as Bidders, in more than one Bid in this bidding process, other than alternative offers in accordance with the Bidding Documents;

i. We understand that this Bid, together with your written acceptance thereof included in your notification of award, shall constitute a binding contract between us, until a formal Contract is prepared and executed; and

j. We understand that you are not bound to accept the Lowest Calculated Bid or any other Bid that you may receive.

k. We likewise certify/confirm that the undersigned, is the duly authorized representative of the bidder, and granted full power and authority to do, execute and perform any and all acts necessary to participate, submit the bid, and to sign and execute the ensuing contract for the [Name of Project] of the [Name of the Procuring Entity*]*.

l. We acknowledge that failure to sign each and every page of this Bid Form, including the Bill of Quantities, shall be a ground for the rejection of our bid.

Name: _____

Legal Capacity: _____

Signature: _____

Duly authorized to sign the Bid for and behalf of: _____

Date: _____

_____

[1] currently based on GPPB Resolution No. 09-2020

STATEMENT OF THE BIDDER'S SINGLE LARGEST COMPLETED CONTRACT (SLCC) SIMILAR TO THE CONTRACT TO BE BID

Name of the Contract or Title Of the Project	Owner's Name and Address	Nature/Scope of Work	Contractor's Role and Percentage Of Participation	Total Contract Value At			Date of Award	Value of Outstanding Works	Contract Duration	
				Award	Completion	Escalated Value to Present Prices			Start	Completed

NOTE :

1. The prospective bidder must have completed an SLCC that is similar to the contract to be bid, and whose value, adjusted to current prices using the PSA consumer price indices, must be at least fifty percent (50%) of the ABC to be bid.

2. This Statement shall be supported by:

   a. Notice of Award and / or Notice to Proceed.
   b. Project Owner's Certificate of Final acceptance issued by the owner other than the Contractor or Constructors Performance Evaluation System (CPES) Final Rating, which must be at least satisfactory.

Name of Firm/Applicant

Authorized Signing Official

Date

Bid Securing Declaration Form

[shall be submitted with the Bid if bidder opts to provide this form of bid security]

REPUBLIC OF THE PHILIPPINES)

CITY OF _____) S.S.

BID SECURING DECLARATION

Project Identification No.: *[Insert number]*

To: *[Insert name and address of the Procuring Entity]*

I/We, the undersigned, declare that:

1. I/We understand that, according to your conditions, bids must be supported by a Bid Security, which may be in the form of a Bid Securing Declaration.

2. I/We accept that: (a) I/we will be automatically disqualified from bidding for any procurement contract with any procuring entity for a period of two (2) years upon receipt of your Blacklisting Order; and, (b) I/we will pay the applicable fine provided under Section 6 of the Guidelines on the Use of Bid Securing Declaration, within fifteen (15) days from receipt of the written demand by the procuring entity for the commission of acts resulting to the enforcement of the bid securing declaration under Sections 23.1(b), 34.2, 40.1 and 69.1, except 69.1(f),of the IRR of RA No. 9184; without prejudice to other legal action the government may undertake.

3. I/We understand that this Bid Securing Declaration shall cease to be valid on the following circumstances:

    a. Upon expiration of the bid validity period, or any extension thereof pursuant to your request;
    b. I am/we are declared ineligible or post-disqualified upon receipt of your notice to such effect, and (i) I/we failed to timely file a request for reconsideration or (ii) I/we filed a waiver to avail of said right; and

c. I am/we are declared the bidder with the Lowest Calculated Responsive Bid, and I/we have furnished the performance security and signed the Contract.

IN WITNESS WHEREOF, I/We have hereunto set my/our hand/s this ____ day of *[month] [year]* at *[place of execution]*.

[Insert NAME OF BIDDER OR ITS AUTHORIZED REPRESENTATIVE]

[Insert signatory's legal capacity]

Affiant

[Jurat]

[Format shall be based on the latest Rules on Notarial Practice]

List of Key Personnel Proposed to be Assigned to the Contract

Business Name :

Business Address :

	Project Manager/ Engineer	Materials Engineer	Foreman	Construction Safety and Health Personnel	Other positions deemed required by the Applicant for this project
1 Name					
2 Address					
3 Date of Birth					
4 Employed Since					
5 Experience					
6 Employment					
7 Education					
8 PRC License					

Minimum : Project Manager 3 years experience
: Project Engineer 3 years experience
: Materials Engineer 1 year experience
: Foreman 3 years experience
: Safety and Health Personnel 1 year experience

Note : Attached individual resume/ biodata and PRC License of the (Professional) Personnel.
Material Engineer - Complied with the DPWH new accreditation requirements.
Construction Safety and Health Officer - Awarded Certificate of Completion by DTI on Construction Safety and Health Course.

Submitted by :
(Printed Name & Signature of the Bidder)

Designation :

Date :

Note: supported by duly notarized bidder's statement of availability of the prospective bidder's key personnel with complete biodata.

KEY PERSONNEL

(FORMAT OF BIO-DATA)

5. Name :_____

6. Date of Birth : _____

7. Nationality :
_____

8. Education and Degrees :
_____

9. Specialty :
_____

10. Registration : _____

11. Length of Service with the Firm :_____ Year from ____ (months) _____(year)

to ____ (months) _____ (year)

12. Years of Experience :_____

13. If Item 7 is less than ten (10) years, give name and length of service with previous employers for a ten (10)-year period (attached additional sheet/s), if necessary:

<u>Name and Address of Employer</u> <u>Length of Service</u>

_____ _____ year(s) from _____ to _____

_____ _____ year(s) from _____ to _____

_____ _____ year(s) from _____ to _____

14. Experience:

This should cover the past ten (10) years of experience. (Attached as many pages as necessary to show involvement of personnel in projects using the format below).

15. Name :_____

16. Name and Address of Owner : _____

17. Name and Address of the Owner's Engineer :
_____

(Consultant)

18. Indicate the Features of Project (particulars of the project components and any other particular interest connected with the project):
_____

19. Contract Amount Expressed in Philippine Currency : _____

20. Position : _____

21. Structures for which the employee was responsible : _____

22. Assignment Period :from _____ (months) _____ (years)
:to _____ (months) _____ (years)

_____

Name and Signature of Employee

It is hereby certified that the above personnel can be assigned to this project, if the contract is awarded to our company.

_____ _____

(Place and Date) (The Authorized Representative)

Key Personnel's Certificate of Employment

Issuance Date

BAC Chairperson

PPA, PMO-Zamboanga del Norte

Dapitan City

Dear Sir / Madame:

I am _____*(Name of Nominee)*____ a Licensed _____ Engineer with Professional License No. _____ issued on __*(date of issuance)*__ at __*(place of issuance)*__.

I hereby certify that ___*(Name of Bidder*_ has engaged my services as ___*(Designation)*__ for ____*(Name of the Contract)*___, if awarded to it.

As *(Designation)*___,I supervised the following completed projects similar to the contract under bidding):

NAME OF PROJECT	**OWNER**	**COST**	**DATE COMPLETED**
_____	_____	_____	_____
_____	_____	_____	_____
_____	_____	_____	_____

_____	_____	_____	_____
_____	_____	_____	_____
_____	_____	_____	_____

At present, I am supervising the following projects:

NAME OF PROJECT	**OWNER**	**COST**	**DATE COMPLETED**
_____	_____	_____	_____
_____	_____	_____	_____
_____	_____	_____	_____
_____	_____	_____	_____

In case of my separation for any reason whatsoever from the above-mentioned Contractor, I shall notify the __*(Name of the Procuring Entity)* at least twenty one (21) days before the effective date of my separation.

As __*(Designation)*, I know I will have to stay in the job site all the time to supervise and manage the Contract works to the best of my ability, and aware that I am authorized to handle only one (1) contract at a time.

I do not allow the use of my name for the purpose of enabling the above-mentioned Contractor to qualify for the Contract without any firm commitment on my part to assume the post of __*(Designation)* therefor, if the contract is awarded to him since I understand that to do so will be a sufficient ground for my disqualification as __*(Designation)* in any future __*(Name of the Procuring Entity)* bidding or employment with any Contractor doing business with the __*(Name of the Procuring Entity).*

_____

(Signature of Engineer)

DRY SEAL

Republic of the Philippines)

_____) S.S.

SUBSCRIBED AND SWORN TO before me this _____ day of _____ 20_____, affiant exhibiting to me his Residence Certificate No. _____ issued on _____ at _____.

Notary Public

Until December 31, 20___

Doc. No. _____;

Page No. _____;

Book No. _____;

Series of _____;

Statement of Availability of Equipment

_____

(Date of Issuance)

ENGR. SALVADOR L. DELINA

Port Manager

PPA, PMO-Zamboanga del Norte

Dapitan City

Attention : **The Chairperson**

Bids and Awards Committee,PPA,PMO-ZDN

Dear Sir:

In compliance with the requirements of PPA, PMO-Zamboanga del Norte - BAC for the

bidding of the _____, we certify the availability of equipment

(Name of Project)

_____ that Owns, has Under Lease, and/or has Under

(Name of Bidder)

Purchase Agreements that may be used for the construction contract, to wit:

List of Equipment Required for the Project:

Very truly yours,

_____

(Name and Signature of Representative)

(Position)

_____

(Name of Bidder

_____

Notary Public

Until 31 December 20____

PTR No._____

Issued at:_____

Issued on:_____

TIN No. _____

Doc. No. _____

Page No. _____

Book No. _____

Series of _____.

CERTIFICATE OF AVAILABILITY

OF LEASE OF EQUIPMENT

This is to certify that the undersigned Lessor has entered into an agreement for the lease of the equipment listed hereunder to Contractor _____ for the contract for _____ _____ _____.

Quantity	Type/Description	Serial Number	Capacity	Condition	Location
_____	_____	_____	_____	_____	_____
_____	_____	_____	_____	_____	_____
_____	_____	_____	_____	_____	_____

This agreement for the lease of the aforecited equipment shall be effective the moment the said contractor is declared the lowest bidder. The contractor or lease shall be executed immediately after the award of the above-mentioned project to the contractor and we shall furnish a copy to Philippine Ports Authority within 20 days after the award. It shall be our duty to verify from the Contractor when the award by Philippine Ports Authority.

The above-mentioned equipment will not be pledged to other Contractors in any other project, until the above project is completed or the equipment is authorized by Philippine Ports Authority for withdrawal.

The proof of ownership of the above cited equipment/tools are herein attached.

This certification is being issued in favor of Mr. _____ Contractor, not merely to help him qualify for this project as I am aware that any false statements issued by me makes liable for perjury.

In case of the equipment mentioned above is not released to the Contractor on time, I agree to be blacklisted and in the future no certification of mine for the lease of equipment shall be honored by Philippine Ports Authority.

IN FAITH therefore I hereunto affix my signature this_____day of_____ 20____ at_____.

CONCURRED IN:

_____ _____

(Lessee) (Affiant- Lessor)

_____ _____

(Address) (Address)

_____ _____

REPUBLIC OF THE PHILIPPINES)

_____) s.s.

SUBSCRIBED AND SWORN TO before me this _____ day of _____, 20____ affiant exhibiting to me his Community Tax Certificate No. _____ issued on _____ at _____.

_____
Notary Public

Doc. No. _____

Page No. _____

Book No. _____

Series of _____

Omnibus Sworn Statement (Revised)

[shall be submitted with the Bid]

REPUBLIC OF THE PHILIPPINES)

CITY/MUNICIPALITY OF _____) S.S.

AFFIDAVIT

I, [Name of Affiant], of legal age, [Civil Status], [Nationality], and residing at [Address of Affiant], after having been duly sworn in accordance with law, do hereby depose and state that:

1. *[Select one, delete the other:]*

   [If a sole proprietorship:] I am the sole proprietor or authorized representative of [Name of Bidder] with office address at [address of Bidder];

   [If a partnership, corporation, cooperative, or joint venture:] I am the duly authorized and designated representative of [Name of Bidder] with office address at [address of Bidder];

2. *[Select one, delete the other:]*

   [If a sole proprietorship:] As the owner and sole proprietor, or authorized representative of [Name of Bidder], I have full power and authority to do, execute and perform any and all acts necessary to participate, submit the bid, and to sign and execute the ensuing contract for [Name of the Project] of the [Name of the Procuring Entity], as shown in the attached duly notarized Special Power of Attorney;

   [If a partnership, corporation, cooperative, or joint venture:] I am granted full power and authority to do, execute and perform any and all acts necessary to participate, submit the bid, and to sign and execute the ensuing contract for [Name of the Project] of the [Name of the Procuring Entity], as shown in the attached [state title of attached document showing proof of authorization (e.g., duly notarized Secretary's Certificate, Board/Partnership Resolution, or Special Power of Attorney, whichever is applicable;)];

3. [Name of Bidder] is not "blacklisted" or barred from bidding by the Government of the Philippines or any of its agencies, offices, corporations, or Local Government Units, foreign government/foreign or international financing institution whose blacklisting rules

have been recognized by the Government Procurement Policy Board, **by itself or by relation, membership, association, affiliation, or controlling interest with another blacklisted person or entity as defined and provided for in the Uniform Guidelines on Blacklisting;**

4. Each of the documents submitted in satisfaction of the bidding requirements is an authentic copy of the original, complete, and all statements and information provided therein are true and correct;

5. [Name of Bidder] is authorizing the Head of the Procuring Entity or its duly authorized representative(s) to verify all the documents submitted;

6. *[Select one, delete the rest:]*

   [If a sole proprietorship:] The owner or sole proprietor is not related to the Head of the Procuring Entity, members of the Bids and Awards Committee (BAC), the Technical Working Group, and the BAC Secretariat, the head of the Project Management Office or the end-user unit, and the project consultants by consanguinity or affinity up to the third civil degree;

   [If a partnership or cooperative:] None of the officers and members of *[Name of Bidder]* is related to the Head of the Procuring Entity, members of the Bids and Awards Committee (BAC), the Technical Working Group, and the BAC Secretariat, the head of the Project Management Office or the end-user unit, and the project consultants by consanguinity or affinity up to the third civil degree;

   [If a corporation or joint venture:] None of the officers, directors, and controlling stockholders of *[Name of Bidder]* is related to the Head of the Procuring Entity, members of the Bids and Awards Committee (BAC), the Technical Working Group, and the BAC Secretariat, the head of the Project Management Office or the end-user unit, and the project consultants by consanguinity or affinity up to the third civil degree;

7. *[Name of Bidder]* complies with existing labor laws and standards; and

8. *[Name of Bidder]* is aware of and has undertaken the responsibilities as a Bidder in compliance with the Philippine Bidding Documents, which includes:

   a. Carefully examining all of the Bidding Documents;
   b. Acknowledging all conditions, local or otherwise, affecting the implementation of the Contract;
   c. Making an estimate of the facilities available and needed for the contract to be bid, if

any; and

d. Inquiring or securing Supplemental/Bid Bulletin(s) issued for the *[Name of the Project]*.

9. *[Name of Bidder]* did not give or pay directly or indirectly, any commission, amount, fee, or any form of consideration, pecuniary or otherwise, to any person or official, personnel or representative of the government in relation to any procurement project or activity.

10. **In case advance payment was made or given, failure to perform or deliver any of the obligations and undertakings in the contract shall be sufficient grounds to constitute criminal liability for Swindling (Estafa) or the commission of fraud with unfaithfulness or abuse of confidence through misappropriating or converting any payment received by a person or entity under an obligation involving the duty to deliver certain goods or services, to the prejudice of the public and the government of the Philippines pursuant to Article 315 of Act No. 3815 s. 1930, as amended, or the Revised Penal Code.**

IN WITNESS WHEREOF, I have hereunto set my hand this __ day of ___, 20__ at _____, Philippines.

[Insert NAME OF BIDDER OR ITS AUTHORIZED REPRESENTATIVE]

[Insert signatory's legal capacity]

Affiant

[Jurat]

[Format shall be based on the latest Rules on Notarial Practice]

SUMMARY SHEET

FOR CONSTRUCTION MATERIALS, LABOR AND EQUIPMENT RENTAL RATES

Project Title:

Location:

No.	**DESCRIPTION**	**Unit**	**Unit Price**
MAJOR CONSTRUCTION MATERIALS			
LABOR RATES			
No.	Description	Rate/Day	

EQUIPMENT RATES

No.	Description	Rate/Day	

Submitted by:

Name of Bidder

Date:

PROJECT METHODOLOGY

FOR THE PROJECT

Port of _____

STATE THE CONSTRUCTION METHODS TO BE USED IN THIS PROJECT

Submitted by

_____

Name and Signature of Bidder

Date of Bidding_____

Contract Agreement Form for the

Procurement of Infrastructure Projects (Revised)

[not required to be submitted with the Bid, but it shall be submitted within ten (10) days after receiving the Notice of Award]

CONTRACT AGREEMENT

THIS AGREEMENT, made this *[insert date]* day of *[insert month]*, *[insert year]* between *[name and address of PROCURING ENTITY]* (hereinafter called the "Entity") and *[name and address of Contractor]* (hereinafter called the "Contractor").

WHEREAS, the Entity is desirous that the Contractor execute *[name and identification number of contract]* (hereinafter called "the Works") and the Entity has accepted the Bid for *[contract price in words and figures in specified currency]* by the Contractor for the execution and completion of such Works and the remedying of any defects therein.

NOW THIS AGREEMENT WITNESSETH AS FOLLOWS:

1. In this Agreement, words and expressions shall have the same meanings as are respectively assigned to them in the Conditions of Contract hereinafter referred to.

2. The following documents as required by the 2016 revised Implementing Rules and Regulations of Republic Act No. 9184 shall be deemed to form and be read and construed as part of this Agreement, *viz.*:

   a. Philippine Bidding Documents (PBDs);
   - i. Drawings/Plans;
   - ii. Specifications;
   - iii. Bill of Quantities;
   - iv. General and Special Conditions of Contract;
   - v. Supplemental or Bid Bulletins, if any;

   b. Winning bidder's bid, including the Eligibility requirements, Technical and Financial Proposals, and all other documents or statements submitted;

Bid form, including all the documents/statements contained in the Bidder's bidding envelopes, as annexes, and all other documents submitted (*e.g.*, Bidder's response to request for clarifications on the bid), including corrections to the bid, if any, resulting from the Procuring Entity's bid evaluation;

c. Performance Security;

d. Notice of Award of Contract and the Bidder's conforme thereto; and

e. Other contract documents that may be required by existing laws and/or the Procuring Entity concerned in the PBDs. **Winning bidder agrees that additional contract documents or information prescribed by the GPPB that are subsequently required for submission after the contract execution, such as the Notice to Proceed, Variation Orders, and Warranty Security, shall likewise form part of the Contract.**

3. In consideration for the sum of *[total contract price in words and figures]* or such other sums as may be ascertained, *[Named of the bidder]* agrees to *[state the object of the contract]* in accordance with his/her/its Bid.

4. The *[Name of the procuring entity]* agrees to pay the above-mentioned sum in accordance with the terms of the Bidding.

IN WITNESS whereof the parties thereto have caused this Agreement to be executed the day and year first before written.

[Insert Name and Signature]	*[Insert Name and Signature]*
[Insert Signatory's Legal Capacity]	*[Insert Signatory's Legal Capacity]*
	for:
for:	*[Insert Name of Supplier]*
[Insert Procuring Entity]	

Acknowledgment

[Format shall be based on the latest Rules on Notarial Practice]

Performance Securing Declaration (Revised)

[if used as an alternative performance security but it is not required to be submitted with the Bid, as it shall be submitted within ten (10) days after receiving the Notice of Award]

REPUBLIC OF THE PHILIPPINES)

CITY OF _____) S.S.

PERFORMANCE SECURING DECLARATION

Invitation to Bid: [Insert Reference Number indicated in the Bidding Documents]

To: [Insert name and address of the Procuring Entity]

I/We, the undersigned, declare that:

1. I/We understand that, according to your conditions, to guarantee the faithful performance by the supplier/distributor/manufacturer/contractor/consultant of its obligations under the Contract, I/we shall submit a Performance Securing Declaration within a maximum period of ten (10) calendar days from the receipt of the Notice of Award prior to the signing of the Contract.

2. I/We accept that: I/we will be automatically disqualified from bidding for any procurement contract with any procuring entity for a period of one (1) year for the first offense, or two (2) years **for the second offense**, upon receipt of your Blacklisting Order if I/We have violated my/our obligations under the Contract;

3. I/We understand that this Performance Securing Declaration shall cease to be valid upon:

a. issuance by the Procuring Entity of the Certificate of Final Acceptance, subject to the following conditions:
   i. Procuring Entity has no claims filed against the contract awardee;
   ii. It has no claims for labor and materials filed against the contractor; and
   iii. Other terms of the contract; or

b. replacement by the winning bidder of the submitted PSD with a performance security in any of the prescribed forms under Section 39.2 of the 2016 revised IRR of RA No. 9184 as required by the end-user.

IN WITNESS WHEREOF, I/We have hereunto set my/our hand/s this ____ day of [month] [year] at [place of execution].

[Insert NAME OF BIDDER OR ITS AUTHORIZED REPRESENTATIVE]

[Insert signatory's legal capacity]

Affiant

[Jurat]

[Format shall be based on the latest Rules on Notarial Practice]